UTN

high pressure fan coils technical manual

GB

High pressure Fan Coils

3 kW - 22 kW

CE

EUROVENT CERTIFIED PERFORMANCE

Galletti
AIR CONDITIONING

INDEX

OPERATING LIMITS

Thermal carrier: water
Water temperature: + 5°C to +95°C
Air temperature: -20°C to + 43°C
Power supply voltage: 230 V +/-10 %
Max. pressure of primary fluid: 10 bar

1 MEAN FEATURES

The new range of UTN high pressure fan coils units has been designed for conditioning rooms that require the installation of ducted units.
Proposed in 14 models with air flows from 600 to 4000 m^3/h, the UTN units are characterized by a wide applicative flexibility thanks to the special constructive solutions.

> possibility of installation both in horizontal and vertical position thanks to the special conformation of the condensate discharge system;
> the air intake direction may be modified during installation;
> reduced height (280 mm up to model 16A);
> pre-shared element for the recycle of external air, standard on all models (Φ 100 mm);
> wide range of accessories for effectively.

2 VERSIONS AND COMPONENTS

Versions

UTN air handling unit setup for 2-pipe systems
UTNDF air handling unit setup for 4-pipe systems (2 heat exchangers)

N.B. both version may be manufactured, on request, with pre-painted panels.

Components

> Load-bearing structure made of galvanized steel sheet of suitable thickness, duly insulated with noise-proof/anticondensing material, self-estinguishing in Class 1; the insulating material is characterized by a thickness of 10 mm and a density of 90 Kg/m^3.
The unit is completed by the following:
- inspections panels;
- setup for external air intake;
- fast-coupling slots.
> Dual intake centrifugal fans made of alluminium, with statically and dinamically balanced impellers, coupled directly to the electric motor.
> 3 speed electric motor, equipped with permanently fit condenser and thermal safety device, installed on vibrator damping supports.
> Heat exchanger: high efficiency, made of copper tube and alluminium fins secured to the tubes by mechanical expansion. It is fitted with brass manifolds and air valves. The heat exchanger, normally supplied with left hand attachments, may be turned by 180°.
> System for collecting and discharging condensate setup either for horizontal or vertical installation.
> Terminal strip for fast - on electrical connections.

The technical and dimensional data indicated in this catalogue are subject to modifications in the view of the improvement of the product.

3 POSSIBLE CONFIGURATIONS

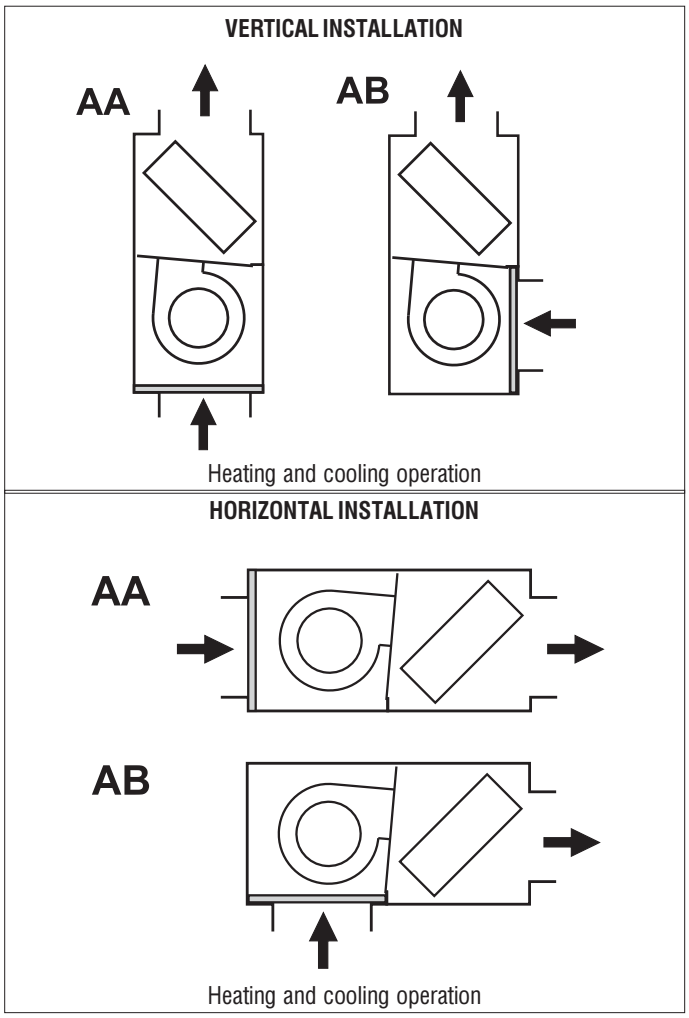

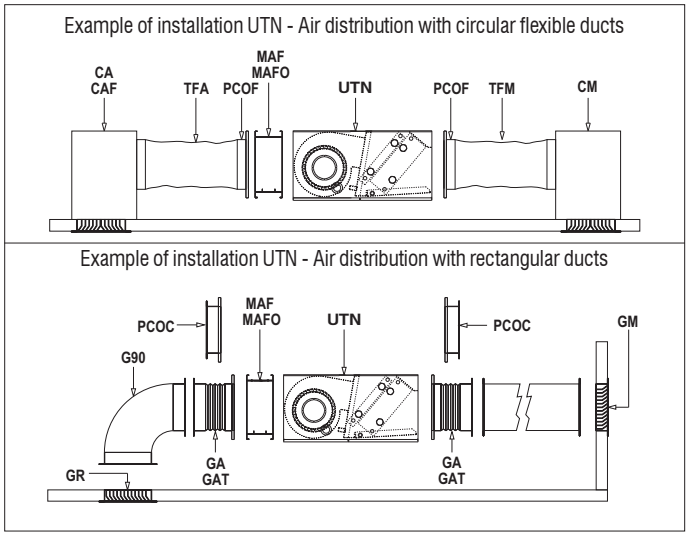

4 AVAILABLE OPTIONS

The wide and complete range of accessories completes the UTN air handling units as far as operation is concerned, adapting these units to any plant-engineering requirements, from the solution with rectangular section channels to the one with round flexible ducts.
The standard machines are supplied without control panel and without air filter.

	CONTROL PANELS AND THERMOSTATS
CD	Flush wall-mounted speed selector
CDE	Wall-mounted speed selector
TD	Wall-mounted control with speed selector, electromechanical thermostat and summer/winter selector
TDC	Wall-mounted control with speed selector and electromechanical thermostat
TD4T	Wall-mounted control with speed selector, electromechanical thermostat and summer winter selector for 2/4 pipe systems with valves
MCB	Wall-mounted microprocessor control - GALLETTI model MYCOMFORT BASE
MCM	Wall-mounted microprocessor control - GALLETTI model MYCOMFORT MEDIUM
MCL	Wall-mounted microprocessor control - GALLETTI model MYCOMFORT LARGE
LED503	Recess wall-mounted microprocessor control
MCSWE	Water probe for microprocessor controls model MYCOMFORT BASE,MEDIUM, LARGE and LED503.
MCSUE	Humidity sensor for on-board microprocessor controls model MYCOMFORT MEDIUM and MYCOMFORT LARGE.
TC	Fan stop thermostat: electromechanical thermostat for minimum water temperature during heating mode
IPM	Power interface for MYCOMFORT and LED503
TA	Electromechanical room thermostat
TA2	Electromechanical room thermostat with summer/winter selection
CSD	Wall-mounted control for proportional opening and closing of the motor driven air intake louver
	AIR SUCTION MODULES WITH FILTERS
MAF	Air suction module with flat filter G2
MAFO	Air suction module with waved filter G4
	CONNECTION PANELS
PCOC	Connecting panel to rectangular ducts
PCOF	Connecting panel to flexible ducts ϕ 200
	3-WAY VALVES AND DRIP TRAYS
V	3 way valve (possibility of motor driven)
M	Electrothermal motor for motor driven valve
R	Hydraulic connection mounting kit
VRCV	Auxiliary drip tray for vertical installation units
VRCH	Auxiliary drip tray for horizontal installation units
KSC	Condensate removal kit
	HOT WATER POST HEATING COIL
BP	Hot water post heating coil module
	ELECTRIC HEATERS
RE	Electric heater, with safety thermostat and power relay
	MOTOR DRIVEN FRESH AIR INTAKE LOUVER
PA90	Motor driven fresh air intake louver
	VIBRATION DAMPERS
GA	PVC vibration damper
GAT	Silicone cloth heat proof vibration dampers
	FLEXIBLE DUCTS - CAPS
TFA	Not insulated flexible ducts, ϕ 200
TFM	Insulated flexible ducts, ϕ 200
TP	Plastic caps ϕ 200
	AIR INLET AND OUTLET PLENUM BOX
CA	Air inlet plenum box with double row grille
CAF	Air inlet plenum box with double row grille and filter G2
CM	Insulated air outlet plenum box with 2 way grille
	AIR INLET AND OUTLET GRILLES
GM	Aluminium air outlet grille with counterframe
GR	Air suction aluminium grille with counterframe

5 RATED TECHNICAL DATA

UTN	Fan speed		0 6	06A	0 8	08A	12	12A	16	16A	22	22A	30	30A	40	40A
Air flow	High	m^3/h	600	600	800	800	1250	1250	1600	1600	2200	2200	3000	3000	4000	4000
Available static pressure	High	Pa	80	75	90	85	88	82	100	95	130	110	185	175	156	146
Total cooling capacity		kW	3,14	3,79	3,90	4,80	6,20	7,00	7,80	8,82	11,90	13,70	16,40	18,30	19,26	22,01
Sensible cooling capacity		kW	2,45	2,87	3,08	3,71	4,65	5,36	6,52	7,16	9,36	10,50	12,80	14,10	15,50	17,57
Water flow		l/h	540	650	669	824	1064	1201	1339	1514	2042	2367	2833	3140	3305	3777
Water pressure drop		kPa	12	10	17	15	24	20	24	16	26	22	34	45	23	23
Heating capacity	High	kW	6,70	7,90	8,20	9,86	13,08	15,08	15,92	18,23	24,40	27,50	33,35	36,81	41,30	46,18
Water flow		l/h	588	693	720	865	1147	1323	1397	1600	2141	2413	2925	3231	3623	4053
Water pressure drop		kPa	10	8	15	12	21	18	20	13	21	18	27	36	24	24
DF heating capacity (4 pipes)	High	kW	3,92	3,92	4,49	4,49	6,62	6,62	9,21	9,21	15,86	15,86	21,15	21,15	24,29	24,29
Water flow		l/h	344	344	394	394	581	581	808	808	1392	1392	1856	1856	2131	2131
Water pressure drop		kPa	7	7	9	9	15	15	13	13	12	12	16	16	15	15
Standard heat exchanger - rows		n°	3	4	3	4	3	4	3	4	3	4	4	5	4	5
Standard heat exchanger - hydraulic connections		in	3/4"	3/4"	3/4"	3/4"	3/4"	3/4"	3/4"	3/4"	1"	1"	1"	1"	1"	1''
Standard heat exchanger - water content		l	1,06	1,41	1,06	1,41	1,42	1,90	1,79	2,38	2,50	3,34	4,02	5,03	4,70	5,88
DF heat exchanger - rows		n°	1	1	1	1	1	1	1	1	2	2	2	2	2	2
DF heat exchanger - hydraulic connection		in	3/4"	3/4"	3/4"	3/4"	3/4"	3/4"	3/4"	3/4"	1"	1"	1"	1"	1''	1''
DF heat exchanger - water content		l	0,35	0,35	0,47	0,47	0,59	0,59	1,42	1,42	1,42	1,42	1,72	1,72	2,01	2,01
Power supply		V/ph/Hz	230 / 1 / 50													
Maximum current absorption		A	0,718	0,718	0,954	0,954	1,575	1,575	1,971	1,971	3,210	3,210	5,370	5,370	5,556	5,556
Maximum power input		W	175	175	234	234	349	349	443	443	714	714	1197	1197	1150	1150
Sound power		dB(A)	63	63	66	66	69	69	72	72	74	74	78	78	79	79
Sound power - air outlet component		dB(A)	59,3	59,3	62,5	62,5	65,2	65,2	68,9	68,9	70,7	70,7	74,5	74,5	75,4	75,4
Sound power - transmitted component		dB(A)	54,7	54,7	58,0	58,0	60,3	60,3	64,0	64,0	65,7	65,7	69,4	69,4	70,4	70,4
Sound power - air inlet component		dB(A)	59,3	59,3	62,5	62,5	65,2	65,2	68,9	68,9	70,7	70,7	74,5	74,5	75,4	75,4
Weight 2 pipe models (UTN)		Kg	31,5	32,5	32,5	33,3	40,6	41,7	47,3	48,7	65,3	67,2	77,0	79,5	84,0	87,0
Weight 4 pipe models (UTN DF)		Kg	33,7	34,7	34,7	35,5	43,2	44,3	50,3	51,7	70,9	72,8	83,4	85,9	92,0	98,5

The aforesaid performance is related to the following conditions.

Air flow:
- related to the rated usable static pressure, at max. speed

Cooling:
- rated air flow
- water inlet temperature 7°C
- water outlet temperature 12°C
- air temperature with dry bulb 27°C
- air temperature with moist bulb 19°C (47% relative humidity)

Heating:
- rated air flow
- water inlet temperature 80°C
- water outlet temperature 70°C
- air temperature 20°C

Sound power read conforming to EN 23741 and EN 23742.

6 VENTILATION FEATURES

Legend:
Psu Available static pressure
Qa Air flow

Vr Fan speed:
3= high
2= medium
1= low

UTN	Vr	Qa	Psu [Pa] 0	10	20	30	40	50	60	70	80	90	100	110	120	130	140	150	160	170	180	200	220	240
UTN 06	3	m³/h	782	762	742	721	699	676	652	627	600	571	540	506	467	422	367	282	-	-	-	-	-	-
	2	m³/h	592	573	554	534	512	490	467	442	415	385	353	316	271	213	-	-	-	-	-	-	-	-
	1	m³/h	426	405	382	359	335	309	282	253	222	189	152	110	-	-	-	-	-	-	-	-	-	-
UTN 06A	3	m³/h	768	749	728	708	686	663	639	614	587	558	527	492	454	408	352	261	-	-	-	-	-	-
	2	m³/h	583	564	545	525	504	482	459	434	407	378	346	309	265	206	-	-	-	-	-	-	-	-
	1	m³/h	422	401	378	355	331	305	279	250	219	186	150	109	-	-	-	-	-	-	-	-	-	-
UTN 08	3	m³/h	1002	982	963	942	921	899	876	851	826	799	771	740	707	671	629	581	-	-	-	-	-	-
	2	m³/h	850	831	811	791	769	747	724	699	673	645	615	582	545	502	448	369	519	411	-	-	-	-
	1	m³/h	597	583	569	553	537	520	502	483	462	439	413	383	345	-	-	-	-	-	-	-	-	-
UTN 08A	3	m³/h	981	963	944	924	904	883	861	838	813	787	760	730	698	661	620	570	500	-	-	-	-	-
	2	m³/h	836	818	798	779	758	736	714	689	664	637	607	574	537	493	437	338	-	-	-	-	-	-
	1	m³/h	596	582	568	552	536	519	501	482	461	438	412	381	343	-	-	-	-	-	-	-	-	-
UTN 12	3	m³/h	1840	1783	1725	1664	1601	1535	1466	1393	1316	1233	1144	1046	937	812	658	438	-	-	-	-	-	-
	2	m³/h	1537	1491	1444	1395	1343	1290	1233	1174	1110	1043	969	888	797	690	555	332	-	-	-	-	-	-
	1	m³/h	1284	1246	1207	1166	1124	1080	1033	983	931	874	812	744	666	573	450	-	-	-	-	-	-	-
UTN 12A	3	m³/h	1787	1731	1673	1613	1551	1486	1417	1346	1269	1188	1100	1004	897	774	623	413	-	-	-	-	-	-
	2	m³/h	1505	1459	1412	1362	1311	1257	1200	1141	1077	1009	935	853	761	653	515	-	-	-	-	-	-	-
	1	m³/h	1259	1222	1183	1143	1101	1057	1011	962	910	854	793	725	647	555	431	-	-	-	-	-	-	-
UTN 16	3	m³/h	2359	2296	2231	2164	2094	2021	1946	1866	1782	1693	1599	1496	1385	1260	1116	942	698	-	-	-	-	-
	2	m³/h	1834	1782	1728	1672	1614	1553	1489	1422	1351	1274	1191	1101	999	881	734	515	-	-	-	-	-	-
	1	m³/h	1495	1451	1405	1358	1308	1256	1201	1143	1081	1015	942	862	770	661	515	-	-	-	-	-	-	-
UTN 16A	3	m³/h	2304	2242	2178	2112	2043	1972	1897	1819	1737	1650	1557	1457	1348	1227	1088	921	694	-	-	-	-	-
	2	m³/h	1819	1767	1713	1657	1599	1538	1474	1407	1335	1259	1176	1085	982	863	715	490	-	-	-	-	-	-
	1	m³/h	1487	1443	1397	1349	1299	1247	1192	1134	1072	1006	933	852	760	650	503	-	-	-	-	-	-	-
UTN 22	3	m³/h	3369	3299	3227	3153	3077	2998	2915	2830	2740	2646	2547	2441	2328	2206	2070	1918	854	1516	1152	-	-	-
	2	m³/h	2425	2365	2302	2237	2170	2101	2028	1952	1872	1787	1696	1599	1492	1374	1238	1075	-	-	-	-	-	-
	1	m³/h	1747	1696	1645	1591	1535	1476	1415	1350	1282	1209	1130	1044	949	840	708	527	-	-	-	-	-	-
UTN 22A	3	m³/h	3114	3047	2977	2905	2831	2753	2673	2589	2501	2408	2310	2205	2092	1967	1829	1670	1475	1200	-	-	-	-
	2	m³/h	2317	2258	2198	2135	2070	2002	1932	1858	1780	1698	1610	1515	1411	1296	1164	1003	782	-	-	-	-	-
	1	m³/h	1695	1646	1595	1542	1487	1430	1370	1307	1240	1168	1091	1007	913	806	676	498	-	-	-	-	-	-
UTN 30	3	m³/h	3532	3506	3480	3454	3427	3400	3373	3346	3318	3290	3261	3232	3203	3173	3143	3112	3081	3050	3018	2952	2883	2813
	2	m³/h	2876	2849	2822	2795	2767	2739	2710	2681	2651	2621	2591	2559	2528	2495	2462	2428	2394	2358	2322	2246	2167	2081
	1	m³/h	2232	2207	2182	2157	2131	2105	2078	2051	2023	1994	1965	1935	1905	1874	1841	1808	1774	1739	1702	1625	1541	1447
UTN 30A	3	m³/h	3500	3474	3448	3422	3395	3368	3341	3313	3285	3257	3228	3199	3170	3140	3110	3079	3048	3016	2983	2917	2848	2777
	2	m³/h	2837	2810	2783	2756	2728	2700	2671	2642	2613	2582	2552	2521	2489	2456	2423	2389	2355	2319	2283	2207	2127	2042
	1	m³/h	2217	2192	2167	2141	2115	2088	2060	2033	2004	1975	1945	1915	1883	1851	1818	1784	1749	1713	1675	1596	1508	1411
UTN 40	3	m³/h	6011	5905	5796	5686	5572	5456	5337	5216	5091	4962	4829	4692	4551	4404	4252	4093	3926	3750	3565	3154	2663	2015
	2	m³/h	4694	4599	4502	4403	4302	4198	4092	3983	3872	3757	3639	3517	3391	3260	3124	2983	2835	2679	2515	2152	1722	1163
	1	m³/h	3795	3705	3613	3520	3424	3326	3226	3123	3017	2909	2797	2682	2562	2439	2310	2176	2036	1889	1733	1389	980	-
UTN 40A	3	m³/h	5786	5683	5579	5471	5362	5250	5135	5017	4896	4772	4644	4512	4375	4233	4085	3932	3770	3601	3421	3023	2549	1920
	2	m³/h	4575	4482	4387	4290	4190	4089	3984	3878	3768	3656	3540	3420	3296	3168	3035	2896	2750	2597	2436	2079	1665	1104
	1	m³/h	3717	3630	3540	3449	3355	3260	3162	3061	2958	2852	2743	2631	2514	2393	2268	2137	2000	1856	1704	1367	967	-

6 VENTILATION FEATURES

Legend:
Psu Available static pressure
Qa Air flow

Vr Fan speed:
3= high
2= medium
1= low

UTN	Vr	Qa	Psu [Pa] 0	10	20	30	40	50	60	70	80	90	100	110	120	130	140	150	160	170	180	200	220	240
UTN 06 DF	3	m³/h	776	756	736	715	693	670	646	621	594	566	534	500	462	417	361	276	-	-	-	-	-	-
	2	m³/h	588	570	550	530	509	487	464	439	412	383	350	313	269	210	-	-	-	-	-	-	-	-
	1	m³/h	424	403	380	357	333	307	280	252	221	188	151	110	-	-	-	-	-	-	-	-	-	-
UTN 06 ADF	3	m³/h	762	743	723	702	680	657	633	608	581	553	521	487	449	403	347	255	-	-	-	-	-	-
	2	m³/h	579	561	542	522	501	479	456	431	404	375	343	306	262	204	-	-	-	-	-	-	-	-
	1	m³/h	420	399	376	353	329	304	277	249	218	185	149	108	-	-	-	-	-	-	-	-	-	-
UTN 08 DF	3	m³/h	992	973	953	932	911	889	866	842	817	790	761	731	698	661	620	571	508	388	-	-	-	-
	2	m³/h	843	824	804	784	762	740	717	692	666	638	608	575	538	495	441	360	-	-	-	-	-	-
	1	m³/h	595	581	566	551	535	518	500	480	459	436	410	380	342	-	-	-	-	-	-	-	-	-
UTN 08 ADF	3	m³/h	973	954	935	916	895	874	852	829	804	779	751	721	688	652	610	559	487	-	-	-	-	-
	2	m³/h	829	811	792	772	751	730	707	683	657	630	600	567	530	486	430	323	-	-	-	-	-	-
	1	m³/h	594	579	565	550	533	516	498	479	458	435	409	378	340	-	-	-	-	-	-	-	-	-
UTN 12 DF	3	m³/h	1790	1734	1677	1618	1556	1491	1423	1352	1277	1196	1109	1013	907	784	633	419	-	-	-	-	-	-
	2	m³/h	1507	1462	1415	1367	1316	1263	1208	1149	1087	1020	947	867	777	672	538	-	-	-	-	-	-	-
	1	m³/h	1266	1229	1190	1150	1108	1064	1017	968	916	860	799	731	654	561	439	-	-	-	-	-	-	-
UTN 12 ADF	3	m³/h	1740	1685	1629	1570	1509	1445	1378	1308	1233	1153	1068	974	869	748	602	397	-	-	-	-	-	-
	2	m³/h	1477	1431	1384	1336	1285	1232	1176	1117	1054	987	914	834	743	636	500	-	-	-	-	-	-	-
	1	m³/h	1242	1205	1167	1127	1086	1042	996	948	896	840	780	712	636	544	421	-	-	-	-	-	-	-
UTN 16 DF	3	m³/h	2301	2239	2175	2108	2040	1968	1894	1815	1733	1646	1553	1452	1342	1219	1078	906	665	-	-	-	-	-
	2	m³/h	1803	1751	1698	1643	1585	1525	1462	1395	1325	1249	1167	1078	977	860	714	496	-	-	-	-	-	-
	1	m³/h	1477	1433	1388	1340	1291	1239	1185	1127	1066	1000	928	849	758	649	504	-	-	-	-	-	-	-
UTN 16 ADF	3	m³/h	2248	2187	2124	2059	1992	1922	1848	1772	1691	1605	1514	1416	1309	1189	1053	888	664	-	-	-	-	-
	2	m³/h	1789	1737	1684	1628	1571	1511	1447	1381	1310	1234	1152	1062	961	843	696	471	-	-	-	-	-	-
	1	m³/h	1469	1425	1379	1332	1282	1231	1176	1119	1057	991	919	839	748	639	492	-	-	-	-	-	-	-
UTN 22 DF	3	m³/h	3294	3225	3154	3081	3005	2927	2845	2760	2672	2578	2480	2375	2263	2141	2006	1855	1676	1448	1065	-	-	-
	2	m³/h	2389	2329	2267	2203	2137	2067	1995	1920	1840	1756	1666	1570	1464	1347	1212	1050	828	-	-	-	-	-
	1	m³/h	1730	1680	1628	1575	1519	1461	1400	1336	1268	1196	1118	1032	937	829	698	518	-	-	-	-	-	-
UTN 22 ADF	3	m³/h	3051	2984	2915	2844	2770	2694	2614	2531	2444	2352	2254	2150	2037	1914	1776	1617	1421	1138	-	-	-	-
	2	m³/h	2284	2226	2166	2104	2040	1973	1903	1830	1753	1671	1584	1490	1387	1272	1140	981	759	-	-	-	-	-
	1	m³/h	1679	1631	1580	1528	1473	1416	1356	1294	1227	1156	1080	996	903	796	667	490	-	-	-	-	-	-
UTN 30 DF	3	m³/h	3509	3484	3458	3432	3405	3378	3351	3324	3296	3268	3239	3210	3181	3152	3121	3091	3060	3028	2996	2931	2862	2792
	2	m³/h	2860	2833	2806	2779	2751	2723	2694	2665	2636	2606	2575	2544	2512	2480	2447	2413	2378	2343	2307	2231	2152	2066
	1	m³/h	2222	2198	2173	2148	2122	2096	2069	2042	2014	1985	1956	1926	1896	1865	1833	1799	1765	1730	1694	1616	1532	1438
UTN 30 ADF	3	m³/h	3478	3452	3426	3400	3373	3346	3319	3292	3264	3236	3207	3178	3148	3119	3088	3058	3026	2995	2962	2896	2828	2756
	2	m³/h	2821	2795	2768	2741	2713	2685	2656	2627	2597	2567	2537	2506	2474	2441	2408	2375	2340	2305	2268	2193	2113	2027
	1	m³/h	2208	2183	2157	2132	2105	2079	2051	2023	1995	1966	1936	1906	1874	1842	1809	1775	1740	1704	1667	1587	1500	1402
UTN 40 DF	3	m³/h	5834	5730	5624	5516	5404	5291	5175	5055	4933	4807	4677	4543	4405	4261	4112	3956	3793	3621	3440	3038	2557	1923
	2	m³/h	4592	4499	4403	4306	4207	4105	4001	3895	3785	3673	3557	3437	3314	3186	3052	2914	2769	2616	2455	2100	1679	1134
	1	m³/h	3729	3640	3550	3458	3364	3268	3170	3068	2965	2858	2748	2635	2518	2397	2270	2139	2001	1857	1704	1366	965	-
UTN 40 ADF	3	m³/h	5626	5526	5423	5318	5210	5100	4988	4872	4754	4632	4507	4377	4243	4104	3959	3809	3651	3485	3309	2919	2454	1838
	2	m³/h	4479	4388	4294	4199	4101	4002	3899	3795	3687	3576	3463	3345	3224	3098	2967	2831	2689	2539	2380	2031	1616	1077
	1	m³/h	3655	3569	3481	3391	3299	3205	3109	3010	2909	2805	2697	2587	2472	2353	2230	2102	1967	1826	1676	1345	953	-

6 VENTILATION FEATURES

6.1 ACCESSORIES: AIR PRESSURE DROP

Legend:
Qa Air flow
ΔPa Air pressure drop

	Qa [m³/h]			150	200	250	300	350	400	450	500	550	600	650	700	750	800	850	900	950	1000	1050
UTN 06 - 06A	MAF	ΔPa	Pa	2	3	4	5	6	8	10	12	14	15	17	20	-	-	-	-	-	-	-
	MAFO		Pa	2	4	5	6	7	9	12	14	16	18	20	23	-	-	-	-	-	-	-
	PCOF A*		Pa	1	1	2	3	4	5	7	8	10	12	14	16	19	-	-	-	-	-	-
	PCOF M**		Pa	-	1	1	2	3	3	4	5	6	8	9	10	12	-	-	-	-	-	-
	RE		Pa	-	1	1	1	2	2	3	5	5	6	7	8	9	-	-	-	-	-	-
	GR		Pa	-	1	2	2	3	4	5	6	8	9	11	12	14	-	-	-	-	-	-
	GM		Pa	-	-	-	-	-	1	1	1	1	1	2	2	2	-	-	-	-	-	-
	Qa [m³/h]			300	350	400	450	500	550	600	650	700	750	800	850	900	950	1000	1050	1100	1150	1200
UTN 08 - 08A	MAF	ΔPa	Pa	6	7	9	10	11	13	15	17	19	22	24	26	28	-	-	-	-	-	-
	MAFO		Pa	7	8	10	11	13	15	18	20	22	25	28	30	32	-	-	-	-	-	-
	PCOF A*		Pa	3	4	5	7	8	10	12	14	16	19	21	24	27	30	-	-	-	-	-
	PCOF M**		Pa	2	3	3	4	5	6	8	9	10	12	14	15	17	19	-	-	-	-	-
	RE		Pa	2	3	3	3	4	5	6	7	8	9	11	12	12	14	-	-	-	-	-
	GR		Pa	2	3	4	5	6	8	9	11	12	14	16	18	20	23	-	-	-	-	-
	GM		Pa	-	-	1	1	1	1	1	2	2	2	3	3	4	4	-	-	-	-	-
	Qa [m³/h]			400	500	600	700	800	900	1000	1100	1200	1300	1400	1500	1600	1700	1800	1900	2000	2100	2200
UTN 12 - 12A	MAF	ΔPa	Pa	5	8	10	13	16	18	21	25	29	32	36	40	-	-	-	-	-	-	-
	MAFO		Pa	6	9	12	15	18	21	25	29	33	37	42	46	-	-	-	-	-	-	-
	PCOF A*		Pa	2	4	5	7	9	12	15	18	21	25	29	33	38	-	-	-	-	-	-
	PCOF M**		Pa	1	2	3	5	6	8	10	12	14	16	19	21	24	-	-	-	-	-	-
	RE		Pa	1	3	3	5	6	7	9	11	13	15	17	20	22	-	-	-	-	-	-
	GR		Pa	2	4	5	7	9	12	14	17	21	24	28	32	37	-	-	-	-	-	-
	GM		Pa	-	-	1	1	1	2	2	3	4	4	5	6	7	-	-	-	-	-	-
	Qa [m³/h]			400	500	600	700	800	900	1000	1100	1200	1300	1400	1600	1800	2000	2200	2400	2600	2800	3000
UTN 16 - 16A	MAF	ΔPa	Pa	4	6	8	9	11	13	16	18	20	23	26	32	38	44	-	-	-	-	-
	MAFO		Pa	5	7	9	11	13	15	18	21	23	27	30	37	44	51	-	-	-	-	-
	PCOF A*		Pa	1	2	3	4	5	7	8	10	12	14	16	21	27	33	-	-	-	-	-
	PCOF M**		Pa	1	1	2	3	3	4	5	6	8	9	10	14	17	21	-	-	-	-	-
	RE		Pa	1	2	3	3	4	5	6	7	8	10	12	15	19	23	-	-	-	-	-
	GR		Pa	1	2	3	5	6	7	9	11	13	16	18	24	30	37	-	-	-	-	-
	GM		Pa	-	-	-	1	1	1	1	2	2	3	3	4	6	7	-	-	-	-	-
	Qa [m³/h]			500	600	700	800	900	1000	1100	1200	1300	1400	1600	1800	2000	2200	2400	2600	2800	3000	3200
UTN 22 - 22A	MAF	ΔPa	Pa	4	5	6	7	8	10	12	13	15	17	21	25	29	33	38	43	48	-	-
	MAFO		Pa	4	6	7	8	10	12	14	15	18	20	24	29	34	38	44	50	55	-	-
	PCOF A*		Pa	1	2	3	4	5	7	8	10	12	14	16	21	27	33	40	48	56	65	-
	PCOF M**		Pa	1	1	2	3	3	4	5	6	8	9	10	14	17	21	26	31	36	42	-
	RE		Pa	1	2	2	2	2	4	4	5	6	7	9	11	13	15	19	22	25	29	-
	GR		Pa	1	2	3	3	4	5	6	8	9	10	13	17	21	25	30	36	41	48	-
	GM		Pa	-	-	-	-	1	1	1	1	1	2	2	3	4	5	6	7	8	9	-
	Qa [m³/h]			1200	1300	1400	1500	1600	1700	1800	2000	2200	2400	2600	2800	3000	3200	3400	3600	3800	4000	4200
UTN 30 - 30A	MAF	ΔPa	Pa	-	-	13	14	16	18	18	22	26	29	33	36	40	45	49	-	-	-	-
	MAFO		Pa	-	-	15	17	18	20	21	25	30	33	38	42	46	52	-	-	-	-	-
	PCOF A*		Pa	8	9	10	12	14	15	17	21	26	31	36	42	48	54	61	-	-	-	-
	PCOF M**		Pa	5	6	7	8	9	10	11	14	17	20	23	27	31	35	40	-	-	-	-
	RE		Pa	-	-	5	5	6	7	7	9	11	13	15	17	20	23	26	-	-	-	-
	GR		Pa	5	6	7	8	9	11	12	15	18	21	25	29	33	38	43	-	-	-	-
	GM		Pa	1	1	1	1	1	2	2	2	3	4	4	5	6	7	8	-	-	-	-
	Qa [m³/h]			1600	1700	1800	1900	2000	2100	2200	2400	2600	2800	3000	3200	3400	3600	3800	4000	4200	4400	4600
UTN 40 - 40A	MAF	ΔPa	Pa	13	14	15	17	17	19	20	23	26	29	33	36	39	42	46	50	53	57	62
	MAFO		Pa	15	16	17	19	20	22	23	27	30	34	38	41	45	49	53	58	61	66	71
	PCOF A*		Pa	9	10	11	12	13	15	16	19	22	25	20	33	36	40	45	50	54	59	65
	PCOF M**		Pa	5	6	6	7	7	9	9	11	13	15	17	19	21	24	26	30	32	35	38
	RE		Pa	0	5	6	7	7	8	8	10	11	13	15	17	19	21	24	27	28	31	35
	GR		Pa	7	8	9	10	11	12	13	16	18	21	24	28	31	35	39	44	48	53	58
	GM		Pa	1	1	1	2	2	2	2	3	3	4	4	5	6	7	8	8	9	10	12

***** **Inlet connecting panel to rectangular ducts**
****** **Outlet connecting panel to rectangular ducts**

6 VENTILATION FEATURES

6.1 ACCESSORIES: AIR PRESSURE DROP

The pressure drops shown below refer to accessories that are not affected by the various sizes of the thermal ventilating units.
Pressure drops refer to the accessory itself and are not related to the size of the thermal ventilating units.

Legend:
Qa Air flow
ΔPa Air pressure drop

Qa[m³/h]		ΔPa	300	400	500	600	700	800	900	1000	1100	1200	1300	1400	1500	1600	1700	1800	1900	2000	2100
UTN	TFA - TFM	Pa	1	1	2	3	4	6	7	9	11	13	15	17	20	23	26	29	32	35	39
	CA2	Pa	1	3	5	8	11	15	20	25	31	37	44	-	-	-	-	-	-	-	-
	CA3	Pa	-	-	1	2	3	5	7	9	12	15	19	23	27	31	36	41	47	52	59
	CAF2	Pa	4	8	12	17	22	29	36	44	53	62	72	-	-	-	-	-	-	-	-
	CAF3	Pa	2	4	5	8	10	13	17	20	24	29	33	39	44	50	56	62	69	76	83
	CM1	Pa	13	24	37	53	73	-	-	-	-	-	-	-	-	-	-	-	-	-	-
	CM2	Pa	1	1	2	3	5	6	7	9	11	13	16	-	-	-	-	-	-	-	-
	CM3	Pa	-	-	1	1	1	1	2	2	3	3	4	5	5	6	7	7	8	9	10

6.2 SOUND POWER LEVELS FOR OCTAVE BAND

Legend:
Psu Available static pressure
L_{WA} A-weighted sound power
Vr Fan speed:
3= high
2= medium
1= low

		Lw							
		125 Hz	250 Hz	500 Hz	1000 Hz	2000 Hz	4000 Hz	8000 Hz	LwA
	Vr	dB	dB	dB	dB	dB	dB	dB	dB/A
UTN 06 - 06A	high	40,6	53,6	56,0	58,9	56,7	50,9	42,1	63,0
	med	36,5	49,2	51,2	52,0	48,2	44,9	36,5	57,0
	low	29,5	42,9	40,9	43,3	39,3	33,9	24,9	48,0
UTN 08 - 08A	high	43,6	47,0	60,0	62,0	60,7	54,8	46,2	66,0
	med	40,7	53,8	53,8	57,0	53,6	50,6	43,3	61,0
	low	33,8	47,7	47,0	49,8	47,0	41,9	33,5	54,0
UTN 12 - 12A	high	45,0	56,9	60,8	64,7	63,5	57,7	49,7	69,0
	med	41,5	52,6	56,9	59,0	54,7	50,9	40,5	63,0
	low	37,0	48,8	53,0	54,4	50,0	48,6	33,5	59,0
UTN 16 - 16A	high	50,7	62,1	64,8	68,1	66,5	62,5	56,2	72,0
	med	45,0	57,5	60,1	62,5	58,9	56,4	49,2	67,0
	low	40,5	53,4	55,9	57,5	54,3	50,3	42,4	62,0
UTN 22 - 22A	high	52,0	62,5	65,2	70,0	69,2	64,5	58,2	74,0
	med	46,2	57,7	59,9	62,8	60,5	57,1	50,0	67,0
	low	39,3	50,6	54,2	55,9	53,1	47,8	41,5	60,0
UTN 30 - 30A	high	61,0	70,5	70,0	72,5	71,1	69,6	63,8	78,0
	med	58,3	65,1	67,1	67,9	65,8	64,2	56,7	73,0
	low	52,1	61,3	62,3	63,8	62,6	60,7	49,1	69,0
UTN 40 - 40A	high	75,5	79,1	74,2	73,8	71,9	68,7	62,4	79,0
	med	71,1	75,3	69,9	69,0	67,0	62,7	55,5	74,0
	low	66,2	71,9	65,8	64,8	62,3	56,5	48,8	70,0

7 PERFORMANCES

7.1 COOLING CAPACITY

Legend:

Tbs_1 Inlet air temperature D.B.
Tbu_1 Inlet air temperature W.B.
Tw_1 Inlet water temperature
Tw_2 Outlet water temperature
Qa Air flow

PFT Total cooling capacity
PFS Sensible cooling capacity
Qw Water flow rate
ΔPw Pressure drop on water side

Tbs_1 / Tbu_1 (UR_1) °C		25 /18 (51%)															
Tw_1 / Tw_2 °C		6/11				7/12				8/13				9/14			
	Qa	PFT	PFS	Qw	ΔPw	PFT	PFS	Qw	ΔPw	PFT	PFS	Qw	ΔPw	PFT	PFS	Qw	ΔPw
	m^3/h	W	W	l/s	kPa	W	W	l/s	kPa	W	W	l/s	kPa	W	W	l/s	kPa
UTN 06	300	1680	1260	0,080	4	1450	1160	0,069	3	1290	1100	0,061	2	1120	1040	0,053	2
	450	2390	1790	0,114	7	2040	1650	0,097	5	1630	1500	0,078	4	1430	1430	0,068	3
	600	3010	2270	0,143	11	2590	2110	0,123	8	2110	1930	0,101	6	1800	1800	0,086	4
UTN 06A	300	1970	1410	0,094	3	1780	1340	0,085	3	1580	1260	0,076	2	1380	1180	0,066	2
	450	2820	2060	0,134	6	2410	1890	0,115	4	1940	1710	0,093	3	1730	1730	0,082	2
	600	3630	2680	0,173	9	3130	2470	0,149	7	2560	2250	0,122	5	2140	2140	0,102	4
UTN 08	400	2170	1620	0,103	6	1840	1490	0,088	5	1460	1350	0,070	3	1330	1330	0,063	3
	600	3010	2270	0,143	11	2590	2110	0,123	8	2110	1930	0,101	6	1800	1800	0,086	4
	800	3740	2860	0,178	16	3220	2660	0,154	12	2660	2450	0,127	9	2240	2240	0,107	6
UTN 08A	400	2530	1840	0,120	5	2140	1680	0,102	4	1840	1560	0,088	3	1600	1470	0,076	2
	600	3630	2680	0,173	9	3130	2470	0,149	7	2560	2250	0,122	5	2140	2140	0,102	4
	800	4600	3460	0,219	14	3990	3210	0,190	11	3300	2940	0,158	8	2740	2740	0,131	5
UTN 12	800	4220	3070	0,201	12	3630	2840	0,173	9	2960	2580	0,141	6	2490	2490	0,119	5
	1000	5030	3660	0,269	17	4340	3390	0,207	13	3580	3100	0,171	9	2990	2990	0,142	7
	1200	5770	4200	0,275	21	4990	3900	0,238	16	4140	3580	0,197	12	3440	3440	0,164	8
UTN12A	800	4700	3430	0,224	10	4050	3170	0,193	8	3320	2880	0,158	6	2730	2730	0,130	4
	1000	5640	4150	0,269	14	4890	3850	0,233	11	4060	3530	0,194	8	3300	3300	0,158	5
	1200	6510	4830	0,310	18	5660	4490	0,270	14	4730	4140	0,226	10	3830	3830	0,183	7
UTN 16	1200	6020	4740	0,287	15	5180	4410	0,247	12	3870	3870	0,185	7	3550	3550	0,169	6
	1400	6770	5400	0,323	19	5840	5040	0,279	14	4370	4370	0,208	9	4010	4010	0,191	7
	1600	7470	6040	0,356	22	6470	5650	0,308	17	4830	4830	0,230	10	4440	4440	0,212	9
UTN 16A	1200	6650	5130	0,317	10	5640	4720	0,269	7	4260	4260	0,203	4	3870	3870	0,185	4
	1400	7570	5900	0,361	12	6470	5460	0,308	9	4870	4870	0,232	6	4450	4450	0,212	5
	1600	8440	6640	0,402	15	7240	6170	0,345	11	5450	5450	0,260	7	4990	4990	0,238	6
UTN 22	1600	8930	6680	0,425	16	7730	6200	0,369	12	6380	5680	0,305	9	5250	5250	0,251	6
	1900	10220	7720	0,487	20	8860	7180	0,422	16	7370	6610	0,352	11	6030	6030	0,288	8
	2200	11420	8710	0,544	24	9920	8120	0,473	19	8280	7490	0,395	14	6760	6760	0,322	10
UTN 22A	1600	10070	7360	0,480	13	8740	6810	0,417	10	7230	6210	0,345	7	5840	5840	0,279	5
	1900	11660	8600	0,555	17	10150	7980	0,484	13	8470	7320	0,404	9	6800	6800	0,324	6
	2200	13150	9800	0,627	21	11480	9110	0,547	16	9630	8390	0,459	12	7700	7700	0,367	8
UTN 30	2000	11600	8520	0,552	18	10180	7950	0,485	15	8640	7340	0,412	11	6670	6670	0,318	7
	2500	13770	10270	0,656	25	12120	9610	0,577	20	10330	8910	0,493	15	7970	7970	0,380	9
	3000	15780	11930	0,752	32	13890	11180	0,662	25	11870	10410	0,566	19	9150	9150	0,437	12
UTN 30A	2000	12920	9310	0,616	25	11510	8720	0,549	20	9990	8110	0,476	15	8300	7450	0,396	11
	2500	15380	11280	0,732	33	13700	10600	0,653	27	11900	9880	0,568	21	9940	9120	0,474	15
	3000	17650	13180	0,841	42	15720	12400	0,750	34	13670	11590	0,652	27	11440	10740	0,546	20
UTN 40	3000	15010	11400	0,715	15	13010	10620	0,620	12	10780	9780	0,514	8	8660	8660	0,413	6
	4000	18580	14380	0,886	22	16180	13460	0,772	17	13570	12480	0,647	13	10820	10820	0,516	8
	5000	21760	17150	1,037	29	19000	16100	0,906	23	16010	14990	0,763	17	12730	12730	0,607	11
UTN 40A	3000	17020	12770	0,811	15	14860	11900	0,708	12	12460	10970	0,594	8	9730	9730	0,464	5
	4000	21260	16340	1,014	22	18640	15300	0,889	17	15780	14210	0,753	13	12270	12270	0,585	8
	5000	25080	19710	1,195	29	22020	18520	1,050	23	18720	17270	0,893	17	14540	14540	0,694	11

7 PERFORMANCES

7.1 COOLING CAPACITY

Legend:

Tbs_1	Inlet air temperature D.B.	**PFT**	Total cooling capacity
Tbu_1	Inlet air temperature W.B.	**PFS**	Sensible cooling capacity
Tw_1	Inlet water temperature	**Qw**	Water flow rate
Tw_2	Outlet water temperature	**ΔPw**	Pressure drop on water side
Qa	Air flow		

Tbs_1 / Tbu_1 (UR_1) °C	27 /19 (47%)																
Tw_1 / Tw_2 °C		6/11				7/12				8/13				9/14			
	Qa	PFT	PFS	Qw	ΔPw	PFT	PFS	Qw	ΔPw	PFT	PFS	Qw	ΔPw	PFT	PFS	Qw	ΔPw
	m^3/h	W	W	l/s	kPa	W	W	l/s	kPa	W	W	l/s	kPa	W	W	l/s	kPa
UTN 06	300	2030	1460	0,097	5	1780	1360	0,085	4	1500	1250	0,072	3	1320	1180	0,063	2
	450	2840	2060	0,135	10	2520	1930	0,120	8	2160	1800	0,103	6	1760	1650	0,084	4
	600	3560	2600	0,169	14	3150	2450	0,150	12	2720	2290	0,130	9	2250	2110	0,107	6
UTN 06A	300	2300	1620	0,110	4	2020	1500	0,096	3	1820	1420	0,087	3	1620	1340	0,077	2
	450	3340	2370	0,159	8	2960	2210	0,141	6	2550	2050	0,122	5	2060	1860	0,098	3
	600	4270	3070	0,203	12	3800	2870	0,181	10	3290	2670	0,157	8	2730	2460	0,130	5
UTN 08	400	2580	1870	0,123	8	2280	1750	0,109	7	1950	1620	0,093	5	1570	1480	0,075	3
	600	3560	2600	0,169	14	3150	2450	0,150	12	2720	2290	0,130	9	2250	2110	0,107	6
	800	4400	3270	0,210	21	3910	3080	0,186	17	3390	2890	0,162	13	2660	2660	0,127	9
UTN 08A	400	3010	2120	0,143	6	2660	1980	0,127	5	2280	1830	0,109	4	1880	1670	0,090	3
	600	4270	3070	0,203	12	3800	2870	0,181	10	3290	2670	0,157	8	2730	2460	0,130	5
	800	5400	3950	0,257	18	4810	3710	0,230	15	4190	3460	0,200	11	3500	3210	0,167	8
UTN 12	800	4990	3520	0,238	16	4430	3300	0,211	13	3830	3070	0,183	10	3160	2820	0,151	7
	1000	5920	4180	0,282	22	5270	3930	0,251	18	4570	3660	0,218	14	3800	3380	0,181	10
	1200	6780	4800	0,323	28	6040	4510	0,288	23	5240	4210	0,250	18	4380	3900	0,209	13
UTN 12A	800	5520	3920	0,263	14	4920	3680	0,235	11	4270	3430	0,204	9	3540	3150	0,169	6
	1000	6600	4740	0,315	19	5900	4450	0,281	15	5140	4160	0,245	12	4300	3850	0,205	9
	1200	7610	5500	0,363	24	6800	5180	0,324	19	5940	4850	0,283	15	5000	4500	0,238	11
UTN 16	1200	7100	5420	0,338	20	6310	5110	0,301	17	5460	4790	0,260	13	4230	4230	0,202	8
	1400	7970	6160	0,380	25	7090	5820	0,338	20	6150	5470	0,293	16	4760	4760	0,227	10
	1600	8790	6890	0,419	30	7820	6520	0,373	24	6800	6130	0,324	19	5260	5260	0,251	12
UTN 16A	1200	7910	5890	0,377	13	6990	5530	0,333	11	5990	5140	0,285	8	4690	4690	0,224	5
	1400	8960	6760	0,427	17	7950	6360	0,379	13	6840	5930	0,326	10	5340	5340	0,255	7
	1600	9970	7600	0,475	20	8850	7160	0,422	16	7640	6700	0,364	12	5950	5950	0,284	8
UTN 22	1600	10490	7630	0,500	21	9350	7170	0,446	17	8130	6700	0,388	13	6780	6190	0,324	10
	1900	11970	8800	0,571	26	10690	8290	0,509	22	9310	7760	0,444	17	7800	7200	0,372	12
	2200	13370	9920	0,637	32	11940	9360	0,569	26	10410	8780	0,496	20	8740	8170	0,417	15
UTN 22A	1600	11780	8390	0,561	17	10540	7880	0,503	14	9200	7340	0,438	11	7690	6760	0,367	8
	1900	13600	9790	0,648	22	12180	9210	0,581	18	10650	8600	0,508	14	8970	7960	0,428	10
	2200	15330	11150	0,731	27	13740	10500	0,655	22	12030	9830	0,574	17	10160	9120	0,485	13
UTN 30	2000	13450	9670	0,641	24	12100	9130	0,577	20	10660	8560	0,508	16	9100	7970	0,434	12
	2500	15950	11640	0,760	32	14360	11010	0,685	27	12670	10360	0,605	21	10850	9670	0,518	16
	3000	18260	13510	0,871	41	16450	12800	0,784	34	14520	12060	0,692	27	12450	11290	0,594	21
UTN 30A	2000	14790	10490	0,705	31	13430	9930	0,640	26	11990	9350	0,572	21	10440	8740	0,498	17
	2500	17610	12710	0,839	42	15990	12050	0,762	35	14270	11370	0,680	29	12430	10660	0,593	23
	3000	20150	14820	0,960	53	18350	14100	0,875	45	16370	13320	0,781	37	14270	12520	0,681	29
UTN 40	3000	17470	13000	0,832	20	15580	12270	0,743	16	13540	11510	0,646	13	11290	10680	0,539	9
	4000	21560	16370	1,027	29	19260	15500	0,918	23	16810	14590	0,801	18	12810	12810	0,611	11
	5000	25210	19510	1,201	38	22550	18510	1,075	31	19710	17470	0,940	24	15020	15020	0,717	15
UTN 40A	3000	19680	14530	0,938	19	17640	13710	0,841	16	15440	12860	0,736	12	13010	11950	0,621	9
	4000	24530	18560	1,169	28	22010	17570	1,049	23	19330	16540	0,921	18	16410	15460	0,783	14
	5000	28900	22370	1,378	37	25950	21230	1,238	31	15440	12860	0,736	12	17080	17080	0,815	15

7 PERFORMANCES

7.2 HEATING CAPACITY

Legend:

Tbs_1 Inlet air temperature D.B.
Tw_1 Inlet water temperature
Tw_2 Outlet water temperature
Qa Air flow
PT Heating capacity
Qw Water flow rate
ΔPw Pressure drop on water side

Tbs_1 / Tbu_1 (UR_1) °C		20											
Tw_1 / Tw_2 °C		50 / 45			60 / 50			70 / 60			90 / 70		
	Qa	PT	Qw	ΔPw	PT	Qw	ΔPw	PT	Qw	ΔPw	PT	Qw	ΔPw
	m^3/h	W	l/s	kPa	W	l/s	kPa	W	l/s	kPa	W	l/s	kPa
UTN 06	300	2410	0,116	6	3060	0,074	3	3970	0,097	4	5330	0,065	2
	450	3290	0,159	10	4180	0,101	5	5430	0,132	7	7260	0,089	3
	600	4070	0,197	15	5160	0,125	7	6700	0,163	10	8940	0,110	5
UTN 06A	300	2690	0,130	4	3450	0,084	2	4450	0,108	3	6020	0,074	1
	450	3790	0,184	8	4850	0,118	4	6270	0,153	5	8460	0,104	3
	600	4790	0,232	12	6110	0,148	5	7900	0,192	8	10620	0,130	4
UTN 08	400	3010	0,146	9	3830	0,093	4	4970	0,121	6	6660	0,082	3
	600	4070	0,197	15	5160	0,125	7	6700	0,163	10	8940	0,110	5
	800	4990	0,242	22	6300	0,153	9	8200	0,200	15	10910	0,134	7
UTN 08A	400	3440	0,166	7	4400	0,107	3	5690	0,139	5	7680	0,094	2
	600	4790	0,232	12	6110	0,148	5	7900	0,192	8	10620	0,130	4
	800	5980	0,290	18	7610	0,185	8	9860	0,240	12	13210	0,162	6
UTN 12	800	5760	0,279	18	7320	0,178	8	9490	0,231	12	12690	0,156	6
	1000	6790	0,328	23	8600	0,209	10	11170	0,272	16	14900	0,183	7
	1200	7730	0,374	29	9770	0,237	13	12710	0,310	20	16920	0,207	9
UTN 12A	800	6480	0,314	15	8290	0,201	7	10690	0,261	10	14400	0,177	5
	1000	7720	0,374	20	9850	0,239	9	12730	0,310	14	17100	0,210	7
	1200	8880	0,430	26	11300	0,274	11	14630	0,356	17	19590	0,240	8
UTN 16	1200	7920	0,383	21	10030	0,244	9	13030	0,318	14	17370	0,213	7
	1400	8830	0,428	25	11170	0,271	11	14520	0,354	17	19320	0,237	8
	1600	9690	0,469	29	12220	0,297	13	15920	0,388	20	21150	0,259	9
UTN 16A	1200	8940	0,433	14	11380	0,276	6	14730	0,359	9	19730	0,242	4
	1400	10040	0,486	17	12740	0,309	7	16530	0,403	11	22090	0,271	5
	1600	11080	0,536	20	14040	0,341	9	18230	0,444	13	24330	0,298	6
UTN 22	1600	11760	0,569	21	14960	0,363	9	19380	0,472	14	25930	0,318	7
	1900	13350	0,646	27	16930	0,411	12	21970	0,536	18	29340	0,360	9
	2200	14830	0,718	32	18770	0,455	14	24400	0,595	21	32520	0,399	10
UTN 22A	1600	12980	0,628	17	16620	0,403	7	21420	0,522	11	28840	0,354	5
	1900	14880	0,720	21	19000	0,461	9	24540	0,598	14	32970	0,404	7
	2200	16680	0,807	26	21260	0,516	11	27500	0,670	18	36870	0,452	8
UTN 30	2000	15010	0,727	24	19180	0,466	11	24740	0,603	16	33240	0,407	8
	2500	17750	0,859	32	22600	0,549	14	29220	0,712	22	39140	0,480	10
	3000	20270	0,980	41	25760	0,625	18	33350	0,813	27	44570	0,546	13
UTN 30A	2000	16300	0,788	31	20970	0,509	14	26890	0,655	21	36350	0,446	10
	2500	19430	0,940	42	24930	0,605	19	32040	0,781	28	43180	0,529	14
	3000	22340	1,081	53	28590	0,694	24	36810	0,897	36	49510	0,607	17
UTN 40	3000	20480	0,991	25	26010	0,631	11	33710	0,821	17	45030	0,552	8
	4000	25120	1,216	35	31790	0,771	15	41300	1,006	24	55000	0,674	11
	5000	29270	1,416	46	36950	0,897	20	48090	1,172	31	63880	0,784	15
UTN 40A	3000	22620	1,095	25	28890	0,701	11	37280	0,909	17	50070	0,614	8
	4000	28050	1,358	36	35690	0,866	16	46180	1,126	24	61810	0,758	12
	5000	32960	1,595	48	41800	1,015	21	54230	1,321	32	72350	0,887	15

7 PERFORMANCES

7.2 HEATING CAPACITY

Legend:

Tbs_1 Inlet air temperature D.B.
Tw_1 Inlet water temperature
Tw_2 Outlet water temperature
Qa Air flow
PT Heating capacity
Qw Water flow rate
ΔPw Pressure drop on water side

Tbs_1 / Tbu_1 (UR_1) °C		22											
Tw_1 / Tw_2 °C		50 / 45			60 / 50			70 / 60			90 / 70		
	Qa	PT	Qw	ΔPw	PT	Qw	ΔPw	PT	Qw	ΔPw	PT	Qw	ΔPw
	m^3/h	W	l/s	kPa	W	l/s	kPa	W	l/s	kPa	W	l/s	kPa
UTN 06	300	2220	0,107	5	3060	0,074	3	3970	0,097	4	5330	0,065	2
	450	3040	0,147	9	4180	0,101	5	5430	0,132	7	7260	0,089	3
	600	3760	0,182	13	5160	0,125	7	6700	0,163	10	8940	0,110	5
UTN 06A	300	2480	0,120	4	3450	0,084	2	4450	0,108	3	6020	0,074	1
	450	3500	0,170	7	4850	0,118	4	6270	0,153	5	8460	0,104	3
	600	4420	0,214	11	6110	0,148	5	7900	0,192	8	10620	0,130	4
UTN 08	400	2780	0,135	8	3830	0,093	4	4970	0,121	6	6660	0,082	3
	600	3760	0,182	13	5160	0,125	7	6700	0,163	10	8940	0,110	5
	800	4610	0,223	19	6300	0,153	9	8200	0,200	15	10910	0,134	7
UTN 08A	400	3170	0,154	6	4400	0,107	3	5690	0,139	5	7680	0,094	2
	600	4420	0,214	11	6110	0,148	5	7900	0,192	8	10620	0,130	4
	800	5520	0,267	16	7610	0,185	8	9860	0,240	12	13210	0,162	6
UTN 12	800	5320	0,258	15	7320	0,178	8	9490	0,231	12	12690	0,156	6
	1000	6270	0,303	20	8600	0,209	10	11170	0,272	16	14900	0,183	7
	1200	7130	0,345	25	9770	0,237	13	12710	0,310	20	16920	0,207	9
UTN 12A	800	5980	0,290	13	8290	0,201	7	10690	0,261	10	14400	0,177	5
	1000	7130	0,345	18	9850	0,239	9	12730	0,310	14	17100	0,210	7
	1200	8200	0,397	22	11300	0,274	11	14630	0,356	17	19590	0,240	8
UTN 16	1200	7310	0,354	18	10030	0,244	9	13030	0,318	14	17370	0,213	7
	1400	8830	0,428	25	11170	0,271	11	14520	0,354	17	19320	0,237	8
	1600	9690	0,469	29	12220	0,297	13	15920	0,388	20	21150	0,259	9
UTN 16A	1200	8250	0,399	12	11380	0,276	6	14730	0,359	9	19730	0,242	4
	1400	10040	0,486	17	12740	0,309	7	16530	0,403	11	22090	0,271	5
	1600	11080	0,536	20	14040	0,341	9	18230	0,444	13	24330	0,298	6
UTN 22	1600	11760	0,569	21	14960	0,363	9	19380	0,472	14	25930	0,318	7
	1900	13350	0,646	27	16930	0,411	12	21970	0,536	18	29340	0,360	9
	2200	14830	0,718	32	18770	0,455	14	24400	0,595	21	32520	0,399	10
UTN 22A	1600	12980	0,628	17	16620	0,403	7	21420	0,522	11	28840	0,354	5
	1900	14880	0,720	21	19000	0,461	9	24540	0,598	14	32970	0,404	7
	2200	16680	0,807	26	21260	0,516	11	27500	0,670	18	36870	0,452	8
UTN 30	2000	15010	0,727	24	19180	0,466	11	24740	0,603	16	33240	0,407	8
	2500	17750	0,859	32	22600	0,549	14	29220	0,712	22	39140	0,480	10
	3000	20270	0,980	41	25760	0,625	18	33350	0,813	27	44570	0,546	13
UTN 30A	2000	16300	0,788	31	20970	0,509	14	26890	0,655	21	36350	0,446	10
	2500	19430	0,940	42	24930	0,605	19	32040	0,781	28	43180	0,529	14
	3000	22340	1,081	53	28590	0,694	24	36810	0,897	36	49510	0,607	17
UTN 40	3000	18920	0,915	21	24430	0,593	10	32100	0,782	15	43390	0,532	7
	4000	23190	1,122	30	29840	0,724	14	39320	0,958	22	52970	0,649	10
	5000	27010	1,308	40	34670	0,842	18	45780	1,116	28	61540	0,754	14
UTN 40A	3000	20900	1,011	21	27130	0,659	10	35510	0,865	15	48230	0,591	7
	4000	25910	1,254	31	33520	0,813	14	43980	1,072	22	59520	0,730	11
	5000	30430	1,473	41	39250	0,953	19	51620	1,258	29	69690	0,854	14

7 PERFORMANCES

7.2 DF COIL HEATING CAPACITY

Legend:
Tbs_1 Inlet air temperature D.B.
Tw_1 Inlet water temperature
Tw_2 Outlet water temperature
Qa Air flow
PT Heating capacity
Qw Water flow rate
ΔPw Pressure drop on water side

Tbs_1 °C	20												
Tw_1 / Tw_2 °C		50 / 45			60 / 50			70 / 60			90 / 70		
	Qa	PT	Qw	ΔPw	PT	Qw	ΔPw	PT	Qw	ΔPw	PT	Qw	ΔPw
	m^3/h	W	l/s	kPa	W	l/s	kPa	W	l/s	kPa	W	l/s	kPa
UTN 06DF	300	1660	0,080	6	2010	0,049	2	2730	0,066	4	3540	0,043	2
	450	2070	0,100	8	2530	0,061	3	3400	0,083	5	4420	0,054	2
	600	2390	0,116	11	2930	0,071	4	3920	0,096	7	5090	0,062	3
UTN 08DF	400	1950	0,094	7	2370	0,058	3	3190	0,078	5	4150	0,051	2
	600	2390	0,116	11	2930	0,071	4	3920	0,096	7	5090	0,062	3
	800	2740	0,133	13	3360	0,081	6	4490	0,110	9	5820	0,071	4
UTN12DF	800	3280	0,158	16	4060	0,099	7	5370	0,131	10	7030	0,086	5
	1000	3650	0,176	19	4510	0,109	8	5970	0,146	13	7800	0,096	6
	1200	3970	0,192	22	4900	0,119	9	6500	0,158	14	8470	0,104	7
UTN 16DF	1200	4900	0,237	15	6040	0,146	6	8030	0,196	10	10460	0,128	5
	1400	5280	0,255	17	6490	0,158	7	8650	0,211	12	11250	0,138	5
	1600	5620	0,272	19	6900	0,168	8	9210	0,224	13	11960	0,147	6
UTN 22DF	1600	7930	0,384	13	9880	0,240	5	13020	0,317	9	17110	0,210	4
	1900	8840	0,428	15	10990	0,267	7	14500	0,353	10	19020	0,233	5
	2200	9670	0,468	18	12010	0,292	8	15860	0,387	12	20790	0,255	6
UTN 30DF	2000	10020	0,485	15	12540	0,304	6	16450	0,401	10	21690	0,266	5
	2500	11530	0,558	19	14400	0,350	8	18920	0,461	13	24900	0,305	6
	3000	12900	0,624	23	16080	0,390	10	21150	0,515	16	27790	0,341	7
UTN 40DF	3000	12500	0,605	17	15590	0,378	7	20490	0,499	11	26940	0,330	5
	4000	14820	0,718	22	18450	0,448	10	24290	0,592	15	31870	0,391	7
	5000	16860	0,816	28	20960	0,508	12	27630	0,673	19	36190	0,444	9

7 PERFORMANCES

7.2 DF COIL HEATING CAPACITY

Legend:
Tbs_1 Inlet air temperature D.B.
Tw_1 Inlet water temperature
Tw_2 Outlet water temperature
Qa Air flow
PT Heating capacity
Qw Water flow rate
ΔPw Pressure drop on water side

Tbs_1 °C	22												
Tw_1 / Tw_2 °C		50 / 45			60 / 50			70 / 60			90 / 70		
	Qa	PT	Qw	ΔPw	PT	Qw	ΔPw	PT	Qw	ΔPw	PT	Qw	ΔPw
	m^3/h	W	l/s	kPa	W	l/s	kPa	W	l/s	kPa	W	l/s	kPa
UTN 06DF	300	1520	0,074	5	1870	0,045	2	2590	0,063	3	3390	0,042	2
	450	1900	0,092	7	2350	0,057	3	3230	0,079	5	4240	0,052	2
	600	2200	0,107	9	2730	0,066	4	3730	0,091	6	4900	0,060	3
UTN 08DF	400	1790	0,087	6	2210	0,054	3	3030	0,074	4	3990	0,049	2
	600	2200	0,107	9	2730	0,066	4	3730	0,091	6	4900	0,060	3
	800	2520	0,122	12	3130	0,076	5	4270	0,104	8	5590	0,069	4
UTN12DF	800	3020	0,146	13	3800	0,092	6	5110	0,124	10	6760	0,083	4
	1000	3360	0,163	16	4220	0,102	7	5680	0,139	11	7510	0,092	5
	1200	3650	0,177	19	4580	0,111	8	6180	0,151	13	8150	0,100	6
UTN 16DF	1200	4510	0,218	13	5640	0,137	6	7630	0,186	9	10060	0,123	4
	1400	4860	0,235	15	6070	0,147	6	8220	0,200	11	10820	0,133	5
	1600	5170	0,250	17	6450	0,157	7	8750	0,213	12	11500	0,141	6
UTN 22DF	1600	7310	0,354	11	9250	0,225	5	12380	0,302	8	16460	0,202	4
	1900	8140	0,394	13	6970	0,169	8	13790	0,336	9	18310	0,224	4
	2200	8910	0,431	16	11250	0,273	7	15090	0,368	11	20010	0,245	5
UTN 30DF	2000	9240	0,447	13	11760	0,285	6	15650	0,381	9	20880	0,256	4
	2500	10630	0,515	17	13490	0,327	7	18000	0,439	12	23970	0,294	6
	3000	11890	0,575	20	15070	0,366	9	20130	0,490	14	26760	0,328	7
UTN 40DF	3000	11520	0,558	14	14610	0,355	6	19500	0,475	10	25940	0,318	5
	4000	13670	0,661	19	17290	0,419	8	23120	0,563	14	30680	0,376	6
	5000	15550	0,753	24	19630	0,476	11	26290	0,641	17	34840	0,427	8

8 INSTALLATION SUGGESTIONS

UTN units can be installed both vertically and horizzontally.
The UTN units are always supplied for the A-A placing.
If a different placing is needed the installer can modify it before mounting the unit (see chapter 3 "POSSIBLE CONFIGURATIONS").
Choose the unit position to have the best ductwork path.
The air sucted by the unit must be filtered: use the MAF or MAFO accessories.
Fit any accessories on the standard unit before installing it.
It is suggested to use anti-vibration joint (available as option) between the unit and the ducts.
Ductworks, in particular the air outlet one, must be insulated to avoid moisture formation.

Keep free space around the fan coil to allow proper operation of the unit and ordinary and extraordinary maintenance.
Install the remote control panel, if any, in a position that can easily be reached by the user to set the functions and that is suitable for the proper detection of the temperature, if provided.
Therefore avoid:
- positions directly exposed to sunlight;
- positions exposed to hot or cold draughts;
- obstacles preventing the proper temperature detection.

If the system is shut down during the winter months, drain off the water from the system to prevent damage due to freezing; if antifreeze solutions are used, check the freezing point using the table shown at the foot of the page.

Glycol percentage in weight	Freezing temperature (°C)	Capacity correction factor	Pressure drop correction factor
0	0	1,00	1,00
10	-4	0,97	1,05
20	-10	0,92	1,10
30	-16	0,87	0,05
40	-24	0,82	1,20

9 DIMENSIONAL DATA

1: 6 fast-coupling slots
2: condensate discharge - horizontal installation
3: condensate discharge - vertical installation
4: right-hand hydraulic attachments
5: AIR DELIVERY
6: AIR INTAKE
6-A supply terms
6-B changeable during installation
7: round pre-sheared element (ϕ 100 mm) for external air inlet

UTN 06 - UTN 08 - UTN 12 - UTN 16

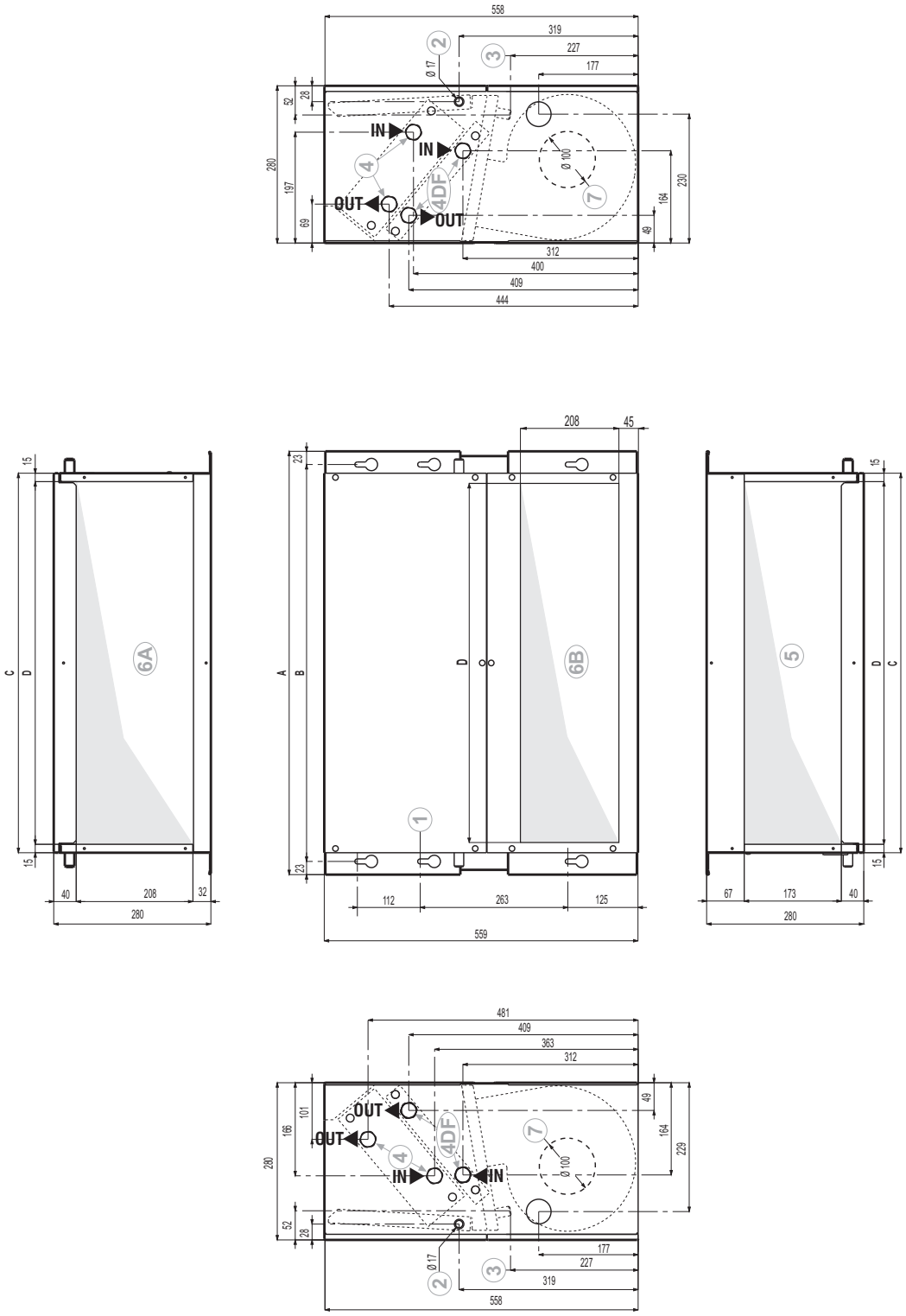

	A	B	C	D
UTN 06	754	707	676	646
UTN 08	754	707	676	646
UTN 12	964	917	886	856
UTN 16	1174	1127	1096	1066

9 DIMENSIONAL DATA

1: 6 fast-coupling slots
2: condensate discharge – horizontal installation
3: condensate discharge – vertical installation
4: right-hand hydraulic attachments
5: AIR DELIVERY
6: AIR INTAKE
6-A supply terms
6-B changeable during installation
7: round pre-sheared element (ϕ 100 mm) for external air inlet

UTN 22 - UTN 30 - UTN 40

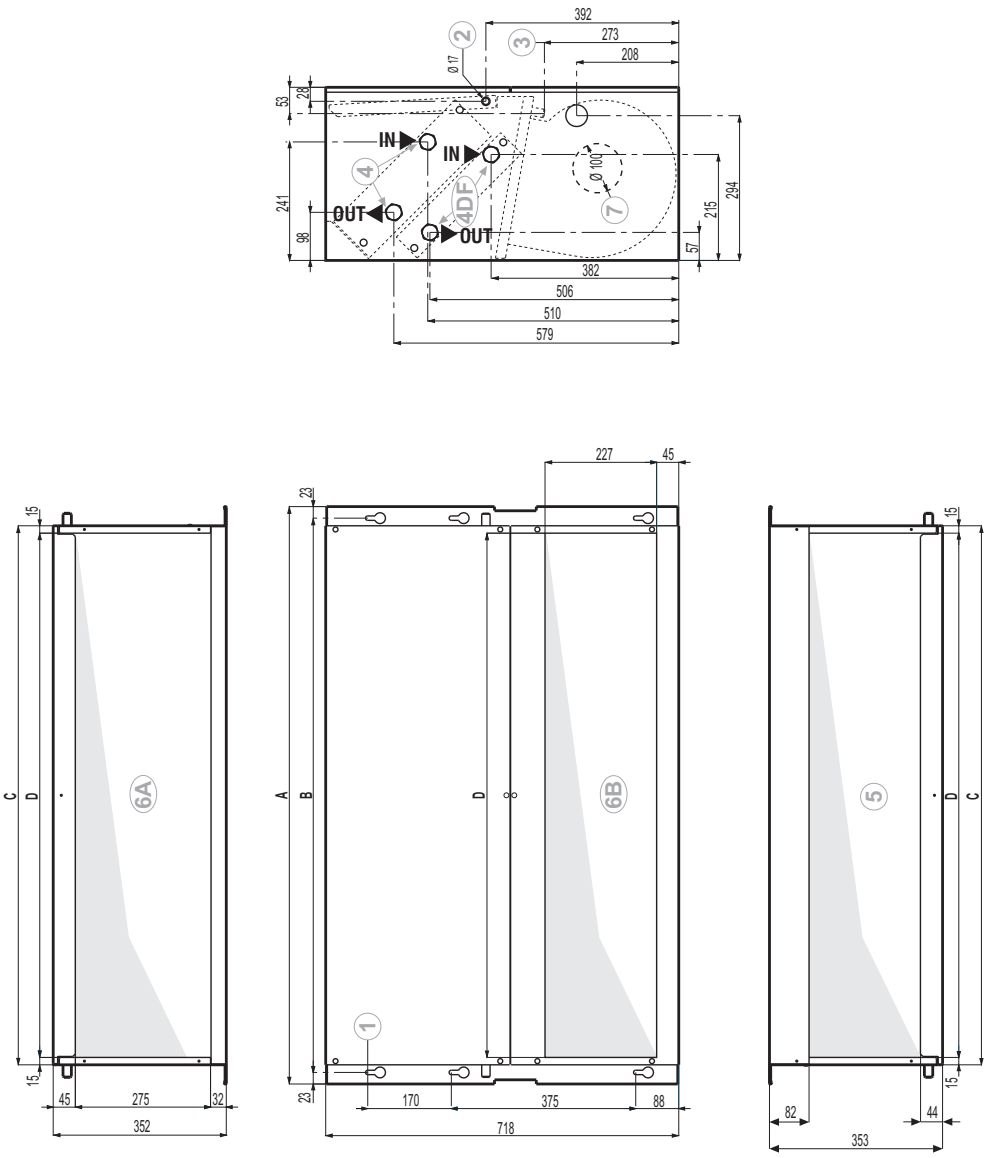

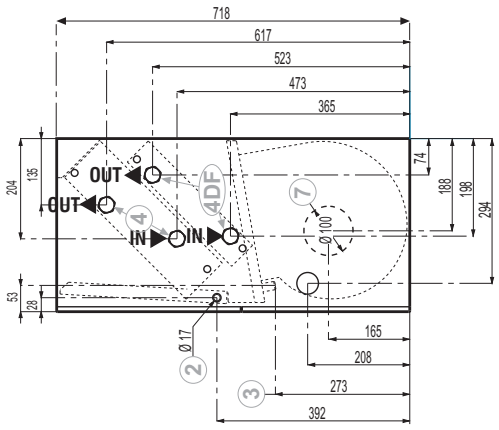

	A	B	C	D
UTN 22	1174	1127	1096	1066
UTN 30	1384	1337	1306	1276
UTN 40	1594	1547	1516	1486

10 WIRING DIAGRAMS

Wiring diagram notes
WARNING! Turn off the power supply before beginning any wiring connections.
The dashed lines connections must be carried out by the installer.

Each fan-coil thermal-ventilating unit requires a switch (IL) on the feeder line with a distance of at least 3 mm between the opening contacts, and a suitable safety fuse (F).

10.1 UTN without control panel:

BK = black, high speed
BU = blue, medium speed
CN = faston connector
F = protection fuse, not supplied
GNYE = green/yellow, ground
GY = grey, medium speed
IL = mains switch, not supplied
M = fan motor
RD = red, low speed
WH = white, common

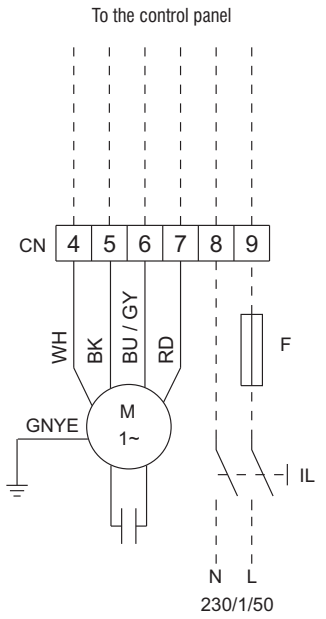

10.2 UTN with **CD** remote three speed selector and **TC** fan stop thermostat:

BK = black, high speed
BU = blue, medium speed
CD = remote speed selection switch
CN = faston connector
F = protection fuse, not supplied
GNYE = green/yellow, ground
GY = grey, medium speed
IL = mains switch, not supplied
M = fan motor
RD = red, low speed
TC = fan stop thermostat
WH = white, common

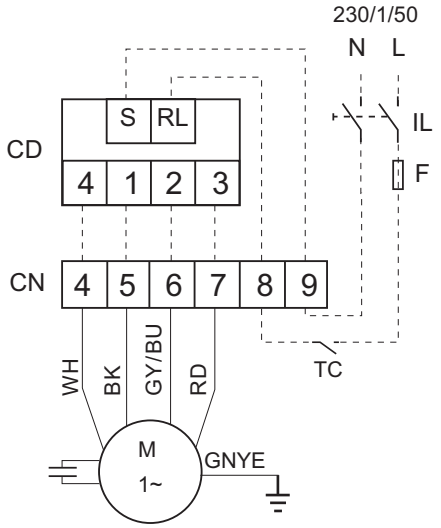

10.3 UTN with **CD** remote three speed selector and **TA** room thermostat:

BK = black, high speed
BU = blue, medium speed
CD = remote speed selection switch
CN = faston connector
F = protection fuse, not supplied
GNYE = green/yellow, ground
GY = grey, medium speed
IL = mains switch, not supplied
M = fan motor
RD = red, low speed
TA = room thermostat
WH = white, common

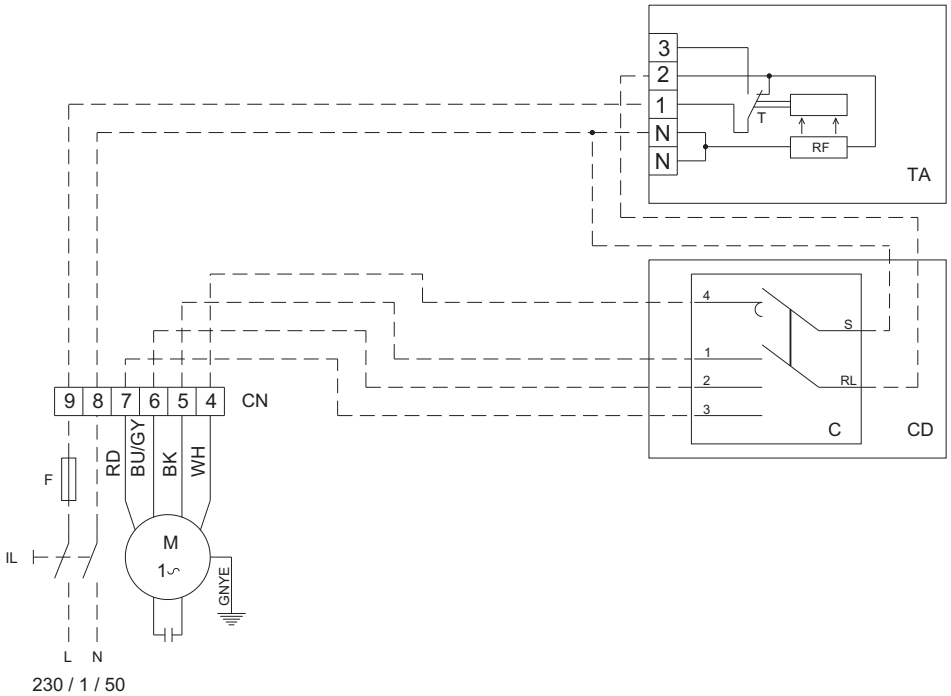

10 WIRING DIAGRAMS

Wiring diagram notes

WARNING! Turn off the power supply before beginning any wiring connections.

The dashed lines connections must be carried out by the installer.

Each fan-coil thermal-ventilating unit requires a switch (IL) on the feeder line with a distance of at least 3 mm between the opening contacts, and a suitable safety fuse (F).

10.4 **UTN** with **CD** remote three speed selector and **TA2** room thermostat:

BK = black, high speed
BU = blue, medium speed
CD = remote speed selection switch
CN = faston connector
F = protection fuse, not supplied
GNYE = green/yellow, ground
GY = grey, medium speed
IL = mains switch, not supplied
M = fan motor
RD = red, low speed
TA2 = room thermostat
WH = white, common

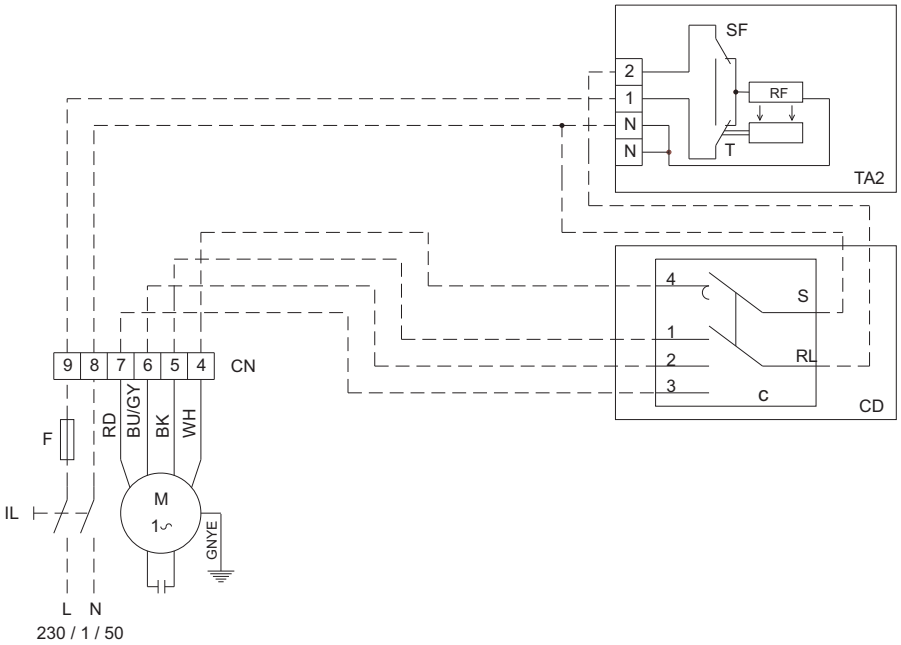

10.5 **UTN** unit connected in parallel with **CD** remote selection switch, **TA** room thermostat and **KP** power interface:

BK = black, high speed
BU = blue, medium speed
CD = Remote speed selection switch
CN = faston connector
F = protection fuse, not supplied
GNYE = green/yellow, ground
GY = grey, medium speed
KP = master/sleeve interface, accessory
IL = mains switch, not supplied
M = fan motor
RD = red, low speed
WH = white, common

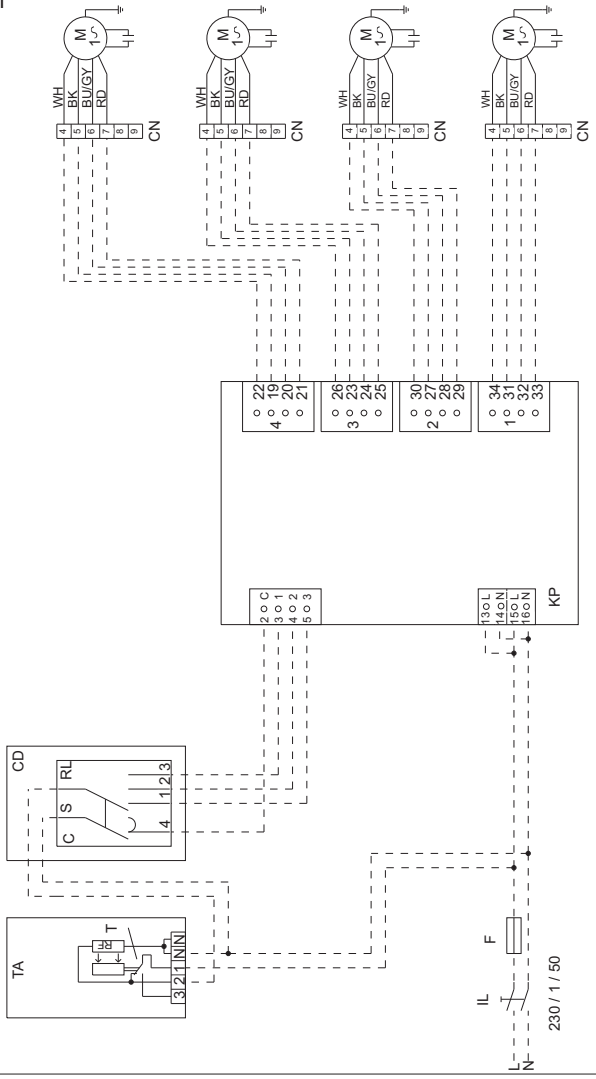

10 WIRING DIAGRAMS

Wiring diagram notes

WARNING! Turn off the power supply before beginning any wiring connections.

The dashed lines connections must be carried out by the installer.

Each fan-coil thermal-ventilating unit requires a switch (IL) on the feeder line with a distance of at least 3 mm between the opening contacts, and a suitable safety fuse (F).

10.6 **UTN** units with **TA** room thermostat with centralised mode selector and **CD**, **CDE** speed selectors:

BK = black, high speed
BU = blue, medium speed
CD = flush remote speed selection switch
CDE = remote speed selection switch
CN = faston connector
F = protection fuse, not supplied
GNYE = green/yellow, ground
GY = grey, medium speed
IL = mains switch, not supplied
M = fan motor
RD = red, low speed
SF = Centralised mode selector, not supplied
TA = room thermostat
TC = fan stop thermostat
WH = white, common

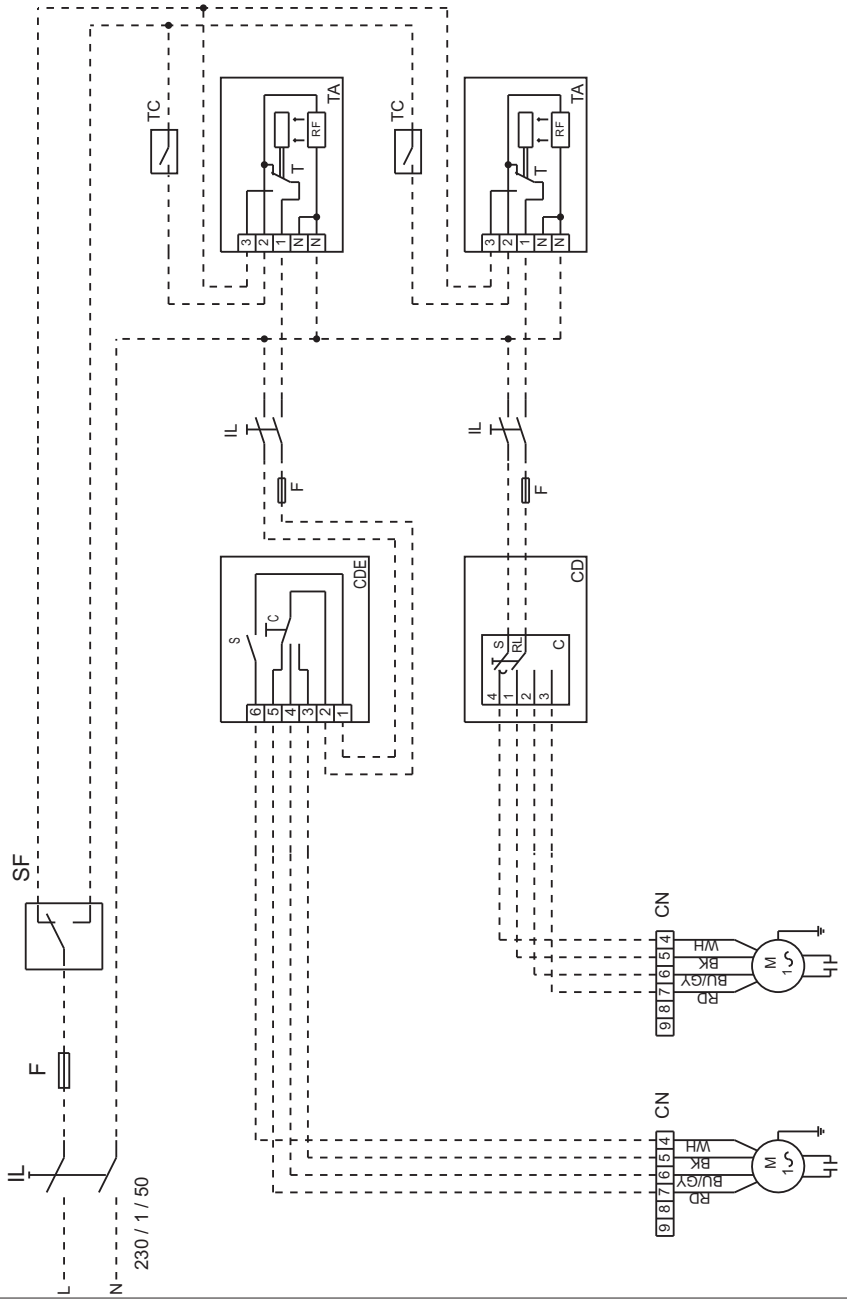

10 WIRING DIAGRAMS

Wiring diagram notes

WARNING! Turn off the power supply before beginning any wiring connections.

The dashed lines connections must be carried out by the installer.

Each fan-coil thermal-ventilating unit requires a switch (IL) on the feeder line with a distance of at least 3 mm between the opening contacts, and a suitable safety fuse (F).

10.7 UTN units with **TD** wall mounted control with speed selector, electromechanical thermostat and summer winter selector:

BK = black, high speed
BU = blue, medium speed
CN = faston connector
F = protection fuse, not supplied
GNYE = green/yellow, ground
GY = grey, medium speed
IL = mains switch, not supplied
M = fan motor
RD = red, low speed
SF = centralised mode selector, not supplied
TD = wall mounted control with speed selector, electromechanical thermostat and summer winter selector
WH = white, common

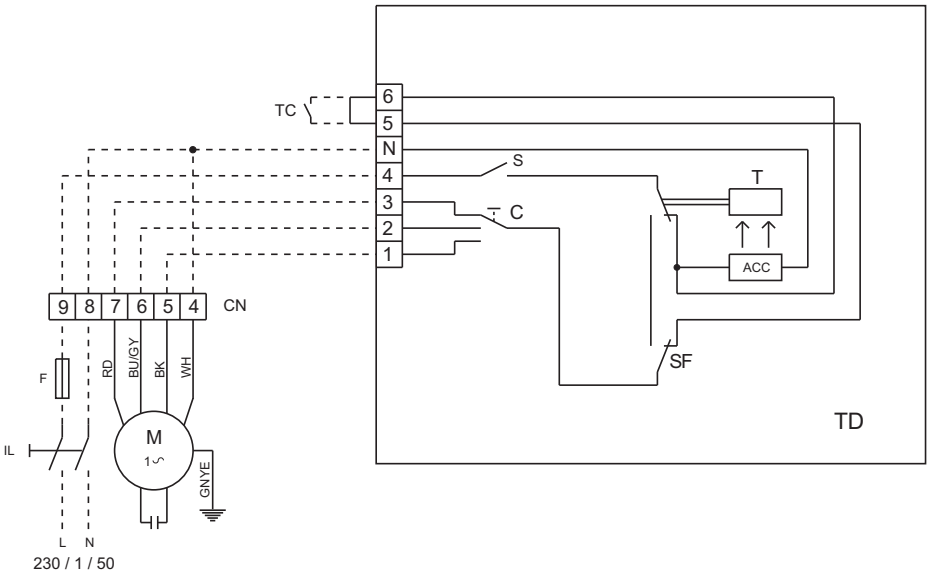

10.8 UTN units with **TDC** wall mounted control with speed selector and electromechanical thermostat:

BK = black, high speed
BU = blue, medium speed
CN = faston connector
F = protection fuse, not supplied
GNYE = green/yellow, ground
GY = grey, medium speed
IL = mains switch, not supplied
M = fan motor
RD = red, low speed
SF = centralised mode selector, not supplied
TC = fan stop motor
TDC = wall mounted control with speed selector and electromechanical thermostat
WH = white, common

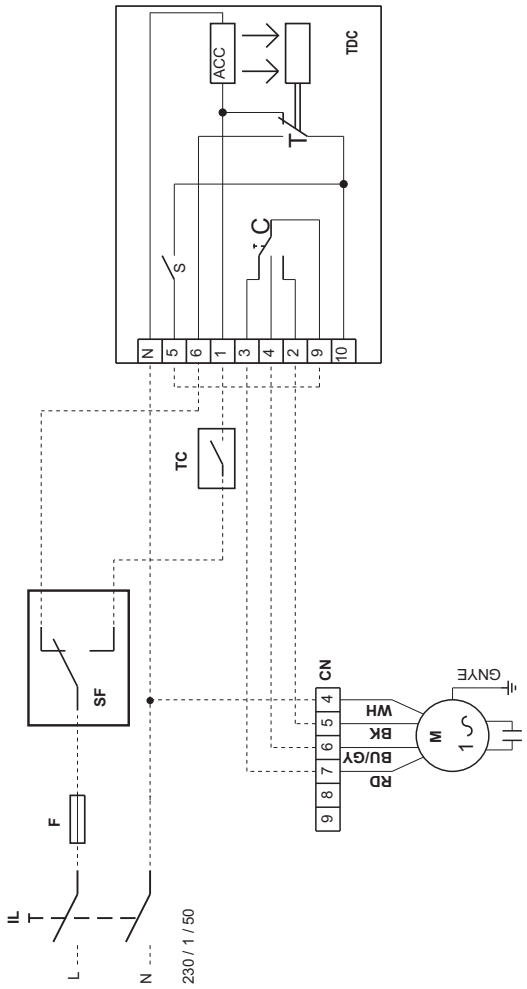

10 WIRING DIAGRAMS

Wiring diagram notes
WARNING! Turn off the power supply before beginning any wiring connections.
The dashed lines connections must be carried out by the installer.

Each fan-coil thermal-ventilating unit requires a switch (IL) on the feeder line with a distance of at least 3 mm between the opening contacts, and a suitable safety fuse (F).

10.9 **UTN** units with **TD4T** wall mounted control with speed selector, electromechanical thermostat and summer winter selector (heating/cooling) for 2/4 pipe systems with valves:

BK = black, high speed
BU = blue, medium speed
CN = faston connector
F = protection fuse, not supplied
GNYE = green/yellow, ground
GY = grey, medium speed
IL = mains switch, not supplied
M = fan motor
RD = red, low speed
SF = centralised mode selector, not supplied
TD4T = wall mounted control with speed selector, electromechanical thermostat and summer winter selector for 2/4 pipe systems with valves.
VK-C = on/off valve for cooling circuit
VK-H = on/off valve for heating circuit
WH = white, common

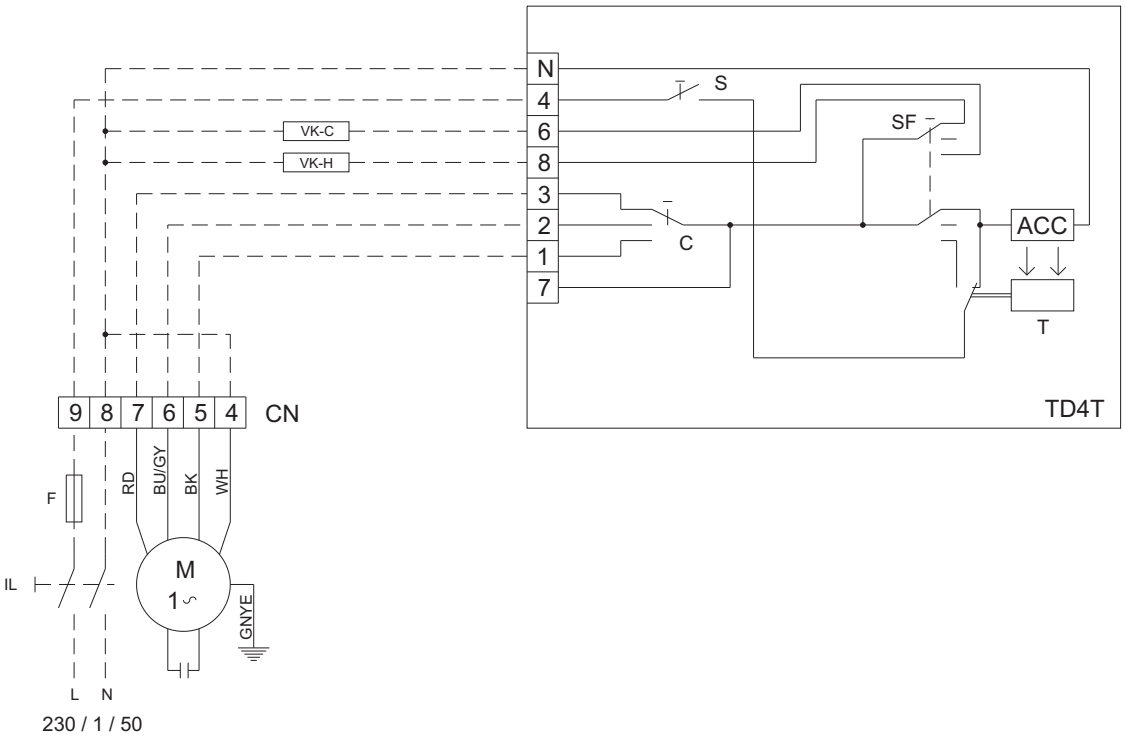

11 MOTORS ELECTRICAL DATA

The following table describes the characteristics of the motors at available working conditions.

Legend:
Vr Operation speed
P_{ASS} Power input
I_{ASS} Operation current

	Vr	I_{ass} (A)	P_{ass} (W)
UTN06-06A	high	0,820	188
	med	0,550	122
	low	0,400	84
UTN08-08A	high	1,210	265
	med	0,810	185
	low	0,700	135
UTN12-12A	high	2,100	460
	med	1,600	345
	low	1,350	385
UTN16-16A	high	2,500	505
	med	1,800	380
	low	1,400	290
UTN22-22A	high	3,500	750
	med	2,350	535
	low	1,800	370
UTN30-30A	high	5,600	1300
	med	4,600	1090
	low	3,800	870
UTN40-40A	high	5,556	1150
	med	3,961	820
	low	3,140	650

12 ACCESSORIES

CD - Flush wall-mounted speed selector

Flush wall-mounted control panel is provided with a 4 positions (3speed + stop) rotation selector.
The CD control panel allows the ON/OFF and fan speed selection of the high pressure fan coil unit.

CDE - wall mounted speed selector

Wall mounted control panel is provided with a 3 positions (3 speed) and switch ON/OFF .
The CDE control panel allows the ON/OFF and fan speed selection of the high pressure fan coil unit.

TD - Wall mounted control with speed selector, thermostat and summer-winter selector

Wall mounted control panel complete with fan speed selector, electromechanical thermostat and cooling / heating mode selector.
Fan speed control, regulation of the room temperature and cooling heating mode selection:
- manual setting of the fan speed;
- room temperature regulation both in cooling / heating mode, by means of fan start / stop, at a manually set temperature.

TDC - Wall mounted control with speed selector and thermostat

Wall mounted control panel complete with fan speed selector, electromechanical thermostat and cooling / heating mode selector.
Fan speed control, regulation of the room temperature and cooling / heating mode selection:
- manual setting of the fan speed;
- room temperature regulation both in cooling / heating mode, by means of fan start/stop, at a manually set temperature.

TD4T - Wall mounted control with speed selector, thermostat and summer-winter selector, for 2/4 pipe system with valves

Wall mounted control panel provided with fan speed selector, electromechanical thermostat, and cooling / heating mode selector; if installed it controls regulating valves.
Fan speed control and regulation of the room temperature:
- manual setting of the operation fan speed;
- regulation of the room temperature for 2 and 4 pipe systems, both in heating and cooling mode, by means of fan start/stop at a manually set temperature and by means of opening and closing of the regulating valve.

12 ACCESSORIES

MYCOMFORT BASE - GALLETTI wall-mounted microprocessor control, model MYCOMFORT BASE, having the following main features:

- Room air temperature reading and adjustment
- Water temperature reading (water sensor as an optional)
- Manual and automatic adjustment of fan speed
- Manual and automatic switching of heating and cooling mode depending on the water temperature within the heat exchanger or on the room temperature, with a neutral zone that can be selected in the range from 2° to 5°C.

The controller is equipped with a large display (3") to show and set all the functions of the unit.
Using the installation kit available, myComfort can be mounted on the unit

MYCOMFORT MEDIUM - GALLETTI wall-mounted microprocessor control, model MYCOMFORT MEDIUM, having the following main features :

- Room air temperature reading and adjustment
- Reading and adjustment of room humidity
- Water temperature reading (water sensor as an optional)
- Manual and automatic adjustment of fan speed
- Manual and automatic switching of heating and cooling mode depending on the water temperature within the heat exchanger or on the room temperature, with a neutral zone that can be selected in the range from 2° to 5°C.
- Serial port for Bus connection

The controller is equipped with a large display (3") to show and set all the functions of the unit.
Using the installation kit available, myComfort can be mounted on the unit

MYCOMFORT LARGE- GALLETTI wall-mounted microprocessor control, model MYCOMFORT LARGE, having the following main features :

- Room air temperature reading and adjustment
- Reading and adjustment of room humidity
- Water temperature reading (water sensor as an optional)
- Manual and automatic adjustment of fan speed
- Manual and automatic switching of heating and cooling mode depending on the water temperature within the heat exchanger or on the room temperature, with a neutral zone that can be selected in the range from 2° to 5°C.
- Clock and hourly timer-programmed operation
- 2 Analogue outputs for controlling modulating devices 0-10V
- 2 Digital outputs for controlling (On/Off) external devices (no-voltage contacts)
- Serial port for Bus connection

The controller is equipped with a large display (3") to show and set all the functions of the unit.
Using the installation kit available, myComfort can be mounted on the unit

SW - Water temperature sensor for microprocessor controls model MYCOMFORT and LED503

Connected directly to the microprocessor control panel, this probe measures the water temperature inside the heat exchanger.
If the temperature registered is lower than 17°C the unit works in cooling mode and the temperature range of the control panel will be referred to the cooling mode (19 / 31°C); if the temperature registered is higher than 37°C the unit works in heating mode and the temperature range of the control panel will be referred to the heating mode (14 / 26°C).
If the temperature registered is between 17°C e 37°C the control panel will disable the unit operation.

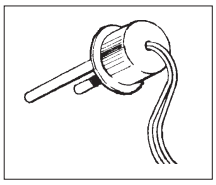

TC - Fan stop thermostat: elecromechanical thermostat for minimum water temperature during heating

Fan stop thermostat with automatic resetting, it stops the fan motor assembly when the water temperature in the heat exchanger decreases under the set value (42°C).
Usefull only in the heating mode for installation on the finned pack of the heat exchanger.

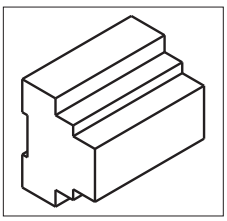

IPM - Power interface for the connections to the control panels MYCOMFORT and LED503

The IPM power board permits to use MYCOMFORT and LED503 microprocessor-based control panels on the whole range of UTN air handling units, even for models with current consumation greayer than 1A.
The capacity of the IPM contacts is 16A, IP30 rating.
The use of the IPM power board matched with the microprocessor controls is:

- compulsory for UTN 30, UTN 30A, UTN 40, UTN 40A.

SU - Humidity sensor for on-board microprocessor controls model MYCOMFORT MEDIUM and MYCOMFORT LARGE.

LED503 - Recess wall-mounted microprocessor control

The proposed microprocessor control panels for Galletti indoor units is completed by the LED503 command with LED display that is designed for recess wall mounting.

CONTROLLER

The control software developed by the Galletti Software Dept., features:
- Manual fan speed selection;
- Automatic selection of fan speed according to the difference between the set temperature and the room air temperature;
- Manual selection of heating/cooling operating mode;
- Automatic selection of heating/cooling operating mode;
- Control of 1 or 2 ON/OFF valves;
- Control of additional heating element;
- On board timer function to detect the actual ambient temperature;
- Reading of air ambient temperature, set point, fan speed and mode selection on the LED display.

12 ACCESSORIES

TA - Wall mounted room thermostat

Room thermostat for wall installation.
Automatic regulation of the room temperature:
- only in the heating mode working on the fan motor assembly and on the regulating valve, if installed (ON/OFF operation);
- only in the cooling mode working on the fan motor assembly and on the regulating valve, if installed (ON/OFF operation);
- both in cooling and heating mode, with remote mode selection working on the fan motor assembly and on the regulating valve, if installed (ON/OFF operation).

TA2 - Wall mounted room thermostat with summer/ winter selector

Wall mounted room thermostat with cooling / heating mode selector.
Automatic regulation of the room temperarure both in heating and cooling mode, working on the fan motor assembly and on the regulating valve if installed (ON/OFF operating).

CSD - Wall mounted control for proportional opening and closing of the PA90 motorized louver

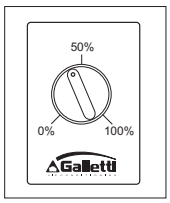

Designed for wall installation it allows the proportional opening and closing from 0 to 100% of the PA90 outdoor air intake motorized louver

MAF / MAFO - Air intake modules with filter

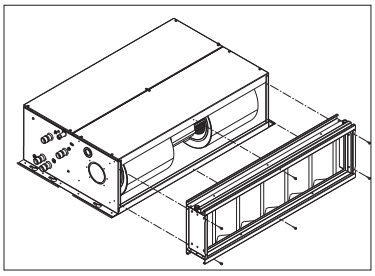

Made of galvanized steel sheet, these modules permit to filter the air sucked up by the unit and also to connect the unit to the intake channeling.
2 version are proposed depending on the guaranteed filtering degree:
MAF: air intake module with flat filter made of acrylic material, self-extinguishing in class 1, with filtering class G2.
MAFO: air intake module with corrugated filter made of acrylic fiber, self-extinguishing in class 1, with filtering EU4.

PCOC - Connecting panel to rectangular ducts

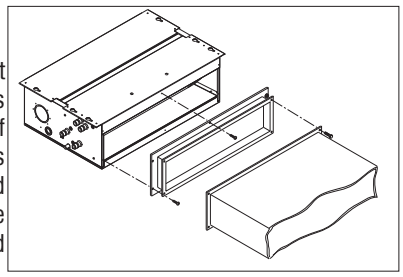

Manufactured in galvanised sheet steel, the PCOC connection panels are used for the connection of rectangular ducts with flanges and with other flanged accessories. They can be installed on both the intake and delivery line.
They are made up of a rectangular panel that is to be secured to the machine (or to another accessory with similar drilling, for example, MAF, MAFO, RE etc..) coupled to a flanged sleeve that represents the starting point for rectangular ducts of the type commonly used in distribution plants.

PCOF - Connecting panel to flexible ducts

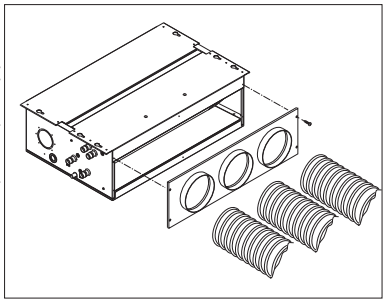

Manufactured in galvanised sheet steel, the PCOF connection panels are used to connect to air distribution plants achieved by means of hoses or to other dedicated accessories. They can be installed on both the intake and delivery line (in this case the hose should be insulated).
They are made up of a rectangular panel that is to be secured to the machine or to another accessory with similar drilling (i.e. MAF, MAFO, RE etc..) complete with circular collars (Ø 200 mm) that represent the starting point for the hoses of the type commonly used in distribution plants.

Model UTN	06-06A	08-08A	12-12A	16-16A	22-22A	30-30A
n° of holes	2	2	3	4	4	5

V - M - R 3-way valve, on-off actuator and hydraulic connections kit

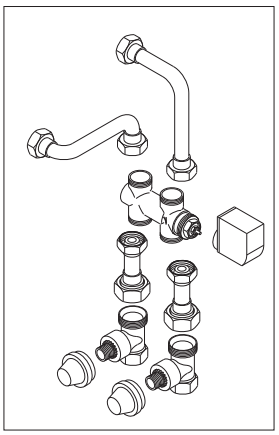

IThe system allows the regulation of the ambient temperature by stopping the water flow into the heat exchanger.
Available for 2 pipe and 4 pipe systems, the kit is made of the components below indicated:
Valve body (V): 3-way with in-built by-pass (4 connections):
- 3/4” for the models UTN 6, UTN 6A, UTN 8, UTN 8A
- 1” for the models UTN 12, UTN 12A, UTN 16, UTN 16A
Actuator (M): normally closed, electrothermal type, 230V single phase, with ON-OFF operation, it works directly on the valve shutter.
Hydraulic connections kit (R): made of copper tubes and brass connections, complete with balancing valve, is different according to the models (standard coil or additional coil in case of 4 pipe systems) and for the unit water connection side.
The hydraulic connections kit is not available for the UTN22 - 22A and UTN30 - 30A units.

VRCV / VRCH - Auxiliary trays for collecting condensate

Auxiliary trays for collecting condensate, used for collecting any condensate that might form on the adjusting valves, the hydraulic unions and the holdfasts during the cooling operating mode.
The trays are made of galvanized metal sheet, with condensate discharge pipe (ϕ17 mm) setup for being connected to a flexible rubber tube, like that which has been envisaged for the condensate discharge trays of the basic unit.
They are available for:
UTN units installed vertically, VRCV.
UTN units installed horizontally, VRCH.

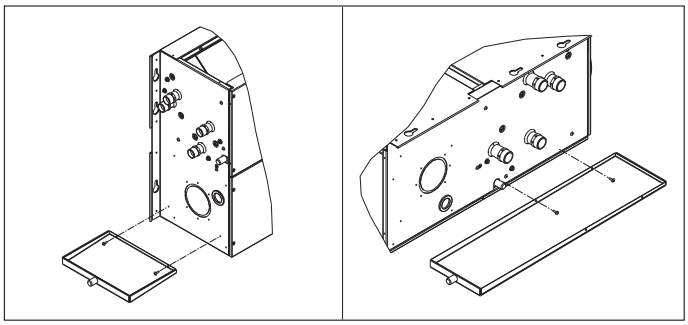

12 ACCESSORIES

KSC - Condensate removal kit

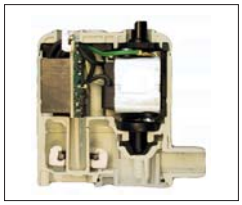

This device allows to overcome displacements in the condensate drain.
The pump can drain water up to 8 l/h and it is completed by a non return valve on the discharge side.

BP - Kit batterie di post riscaldamento

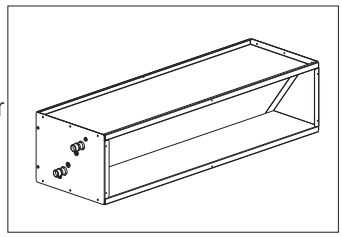

BP 1 or 2 row reheating exchangers are designed for installation on the air outlet of the UTN air conditioning and thermal ventilating units.
NOTE:
The BP module has holes like those on the machine air intake, on the extremity turned toward the air outflow ducts. This allows you to attach all the accessories that can be directly applied on the machine (PCOC, PCOF, GAT, etc…).

RE - Supplementary heating elements

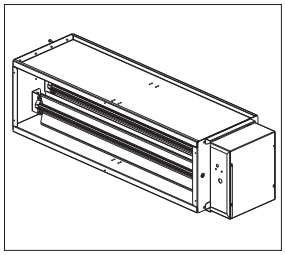

Useful as heating integration to the hot water system, the RE kit is made of an electric heater with safety thermostat (automatic and manual resetting) and power relay.
The RE electric heater kit has to be matched with the MICROPRO-D control panel and with the IPM power board.

PA90 - Outdoor air inlet motorized louver

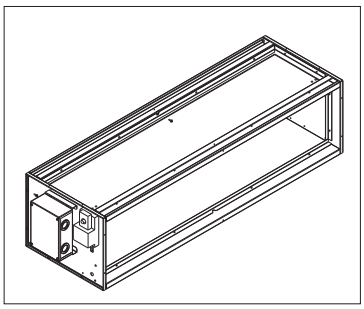

The outdoor air inlet motorized louvre is intended for replacing the air in the room directly from the air-handling unit. The amount of outdoor air that will be let into the room, after having been filtered and treated thermally, may be regulated proportionally from 0 to 100% by means of a servomotor controlled by a rotary potentiometer that is inside the specific CSD control, which is designed for flush wall-mounting installations.
Kit PA90, as shown in figure (1), essentially comprises the following components:
A) Outdoor air inlet louvre made of galvanized steel sheet and setup for being connected to the machine, at one end, and to the other required accessories.
B) Servomotor connected directly to the louvre's baffle, with a protection rating of IP54 and power supply of ~ 24V. The louvre may be opened or closed automatically at the signal of the external auxiliary contacts (not supplied) such as antifreeze thermostats, timers, etc., with the possibility of connecting multi-servomotors in parallel to an individual opening-closing control.
C) 230V - 24V voltage transformer, complete with support terminal strip housed inside the specific electrical box, which functions as a mechanical protection for preventing the access to the connecting terminal strip and to the transformer itself.
D) Self-threading fixing screws.

GA / GAT - Vibration dampers

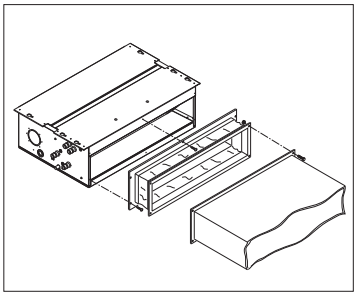

Manufactured in galvanized sheet steel, the GA/GAT connection panels are used to connect to rectangular ducts equipped with flanges and other flanged accessories.
They are made up of a rectangular panel that is to be secured to the machine or to another accessory with similar drilling (i.e. MAF, MAFO, RE etc...) coupled by means of a flexible bellow to a flanged sleeve that rapresents the starting point for rectangular ducts of the type commonly used in distribution plants.
If the vibration damping joint is used together with the electrical heating elements module (accessory RE) a GAT joint made of heat-resistant silicone material is to be fitted on the delivery line.

TFA - Not insulated flexible ducts

Uninsulated flexible duct for the connections to the air distribution with ϕ 200 mm diameter, supplied in 6 m lenght undivisible.

TFM - Insulated flexible ducts

Insulated flexible duct for the connections to the air distribution with ϕ 200 mm diameter, supplied in 6 m lenght undivisible. The insulation of the duct is optained by means of fiberglass, thickness 25 mm with 16 Kg/m^3 density.

TP - Plastic cap

Plastic cap ϕ 200 mm for the closing on the PCOF, of the air outlet not used.

CA / CAF - Air inlet plenum box

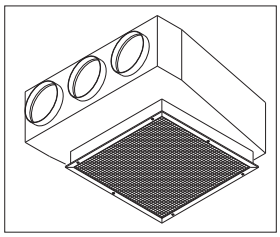

Intake Plenum box in galvanised sheet metal complete with circular collars (Ø 200 mm) for the connection, by means of hoses and intake grids with fixed fins, to pocket type structures, to increase the free air flow cross section.
Sized to be adaptable to the modular structure of the ceiling panels, they are equipped with 2 or 3 circular collars so that they can be connected, following their suitable combination, to all the heater fans of the UTN range. The CA version is equipped with just the grid alone whereas the CAF version is also equipped with a flat filter in acrylic material, with filtering rating G2, housed in the standard frame. The filter of this second type of intake box can be serviced (cleaned) on a periodic basis without having to access the unit fitted behind the ceiling panels or in a service room.

GM - Alluminium air outlet grille

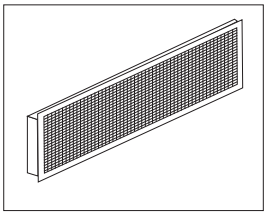

Air delivery grids with double row of adjustable fins in anodised aluminium, equipped with galvanised sheet metal frame that is used to wall-mount the grids or to fit them directly on the delivery head of the machine.
The galvanised sheet metal frame is drilled at one end so that it can be secured directly to the delivery head of the heater fan (or to accessories such as the additional RE electrical module).

GR - Alluminium air inlet grille

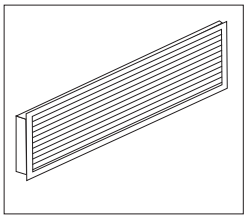

Air intake grids with single row of fins in anodised aluminium, equipped with galvanised sheet metal frame that is used to wall-mount the grids or to fit them directly on the intake head of the machine.
The galvanised sheet metal frame is drilled at one end so that it can be secured directly to the intake head of the heater fan (or to accessories such as the MAF and MAFO filtering units).

13 MAINTENANCE

The maintenance operations for the UTN air conditioning and hot-air heating units are limited to the periodic cleaning of the air filter (provided on MA/F and MA/FO accessories) and the heat exchanger, and the checking of the working efficiency of the condensate discharge.
Only skilled personnel may perform the aforesaid maintenance.
Pay utmost attention during the maintenance operations: accidentally coming into touch with some of the metallic parts might cause injuries therefore wear safety work gloves.
Every time the units are started after long dwell times, make sure that air is NOT present inside the heat exchanger.
The motor is maintenance-free since it is equipped with self-lubricating bearings.
For safety reasons, before performing any maintenance or cleaning operations, turn off the equipment and cut voltage by turning the line switch.

40010 Bentivoglio (BO)
Via Romagnoli, 12/a
Tel. 051/8908111
Fax 051/8908122
www.galletti.it

Company ISO 9001/2000 and OHSAS 18001 certified